1.0 ЦИЛИНДРИЧЕСКИЕ СООСНЫЕ РЕДУКТОРЫ

AR
AM, AC

		Стр.
1.1	Технические характеристики	B2
1.2	Маркировка	B2
1.3	Исполнения	B3
1.4	Смазк	B4
1.5	Радиальная и осевая нагрузки	B6
1.6	Характеристки редукторов	B8
1.7	Характеристки мотор-редукторов	B17
1.8	Размеры	B30
1.9	Шпонки	B42

40-50-60-80-100

25-35-41-45

50-55-60-70-80-90
100-110-120-140

1.1 Caratteristiche tecniche

La progettazione di questi riduttori è stata impostata su una struttura monolitica particolarmente rigida che permette l'applicazione di elevati carichi.

1.1 Technical characteristics

The design of this series of gearboxes has been based on a particularly rigid monolithic structure enabling the application of heavy loads.

1.1 Технические характеристики

Редукторы и мотор-редукторы данного типа сконструированы в цельном неразъемном корпусе, способном воспринимать повышенные нагрузки.

1.2 Designazione

1.2 Designation

1.2 Маркировка

	Versione *Version* Исполнение	Grandezza *Size* Габарит		ir	IEC	Tipo *Type* Тип	Grandezza *Size* Габарит	Lunghezza *Lenght* Типоразмер	Designazione Motori *Designation Motors* Маркировка моторов CT18IGBD1
									Esempio / *Example* / Пример
AM	—			vedi tabelle prestazioni *See performance tables* Смотри таблицу характеристик	80 (B5) 80 (B14)				**AMP 50/2 1:20 80B5**
	P **P1** **P2** **F1** **F2** **F3** **P/F** **P/F1** **P/F2** **P/F3**	**25** **32** **35** **41** **45** **50** **60** **80** **100** **120**	**/1** **/2** **/3**			T TA .... H	56 315	A .... ML	**AMP 50/2 1:20 T 56 A 4 B5**
****AR**									**ARP 50/2 1:20**
***AC**	B3					T TA .... H	56 315	A .... ML	**ACP 50/2 1:20 T 56 A 4**

Altre specifiche:

Posizione della morsettiera del motore se diversa da quella standard (1).
Lubrificante (non per i tipi già lubrificati a vita).
Posizione di montaggio con indicazione tappi di livello e carico; se non specificato si considera standard la posizione M1.

N.B.
* Non sono previste le versioni AC 35, 41, 45, 100, 120
** Non è prevista la versione AR 25, 35, 41,45.

Further specifications:

Terminal board box position if different from standard (1).
With lubricant (except for size lubricated for life).
Mounting position. Indications must be given regarding level and breather plugs. If not specified positions, M1 is considered standard.

NOTE.
** We don't supply the following type: AC 35, 41, 45, 100, 120*
*** We don't supply the type AR 25, 35, 41, 45.*

Другие спецификации:

Положение клеммной коробки двигателя, если отличается от стандартного (1).
Тип смазки (за исключением габарито поставлямых со смазкой на весь срок эксплуатации).
Монтажная позиция с указанием пробок для заправки, слива и контроля уровня масла; если иное не указано, предполагается стандартная позиция M1.

ПРИМЕЧАНИЕ.
* Не изготавливаются следующие типы AC 35, 41, 45, 100, 120
** Не изготавливаются AR 25, 35, 41, 45.

1.3 Versioni 1.3 Versions 1.3 Исполнения

Versioni riduttori
Gearboxes versions
Исполнения редукторов

AM/1 - AR/1 - AC/1

32 - 40 - 50 - 60 - 80 -100

	AM... (IEC)	AM...	AR...	AC...
P	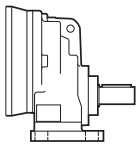	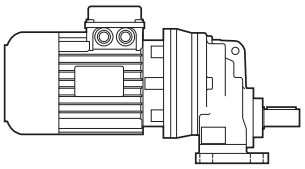	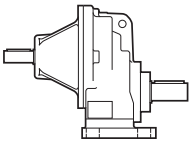	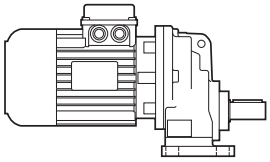
F1 F2 F3	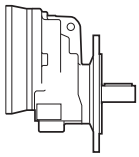	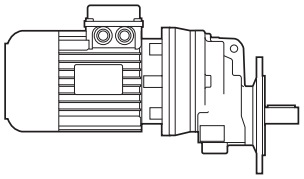	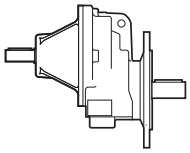	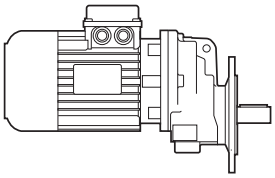

Versioni riduttori
Gearboxes versions
Исполнения редукторов

AM/2-3 - AC/2-3

25 - 35 - 41 - 45

	AM... (IEC)	AM...	** AR...	* AC...
—	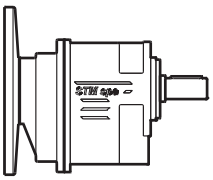	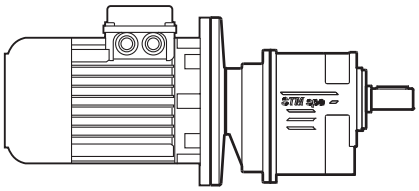		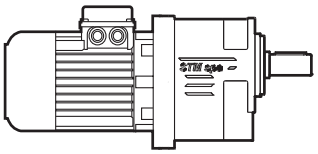
P (25-35-45) **P1** (41) **P2** (41)	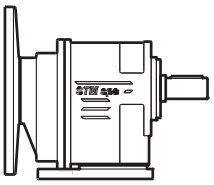	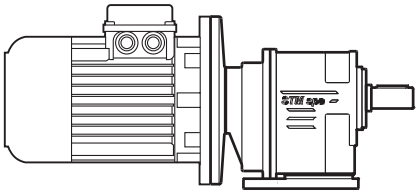		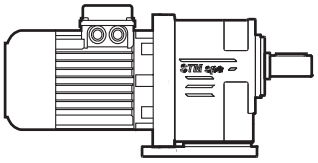
F...	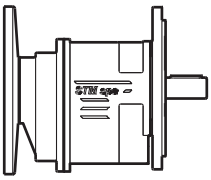	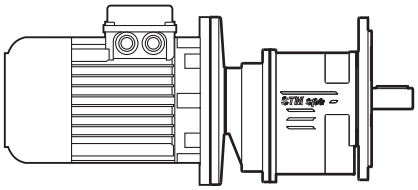		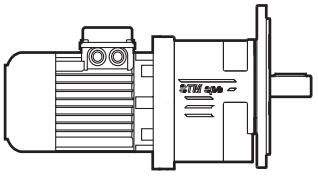
P/F. (25-35-45) **P1/F.** (41) **P2/F.** (41)	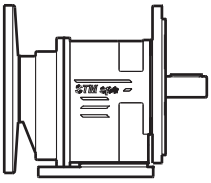	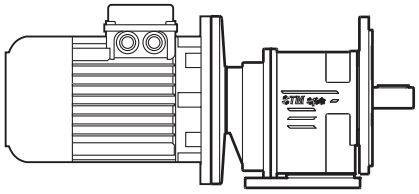		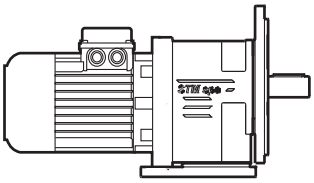

Versioni riduttori
Gearboxes versions
Исполнения редукторов

AM/2-3 - AR/2-3 - AC/2-3

50 - 60 - 80 - 100 - 120

	AM... (IEC)	AM...	AR...	* AC...
P 50 - 120	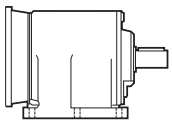	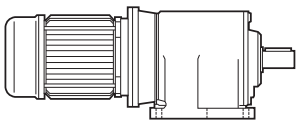	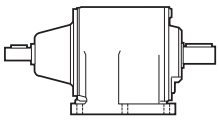	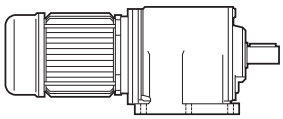
F1 F2 F3 50 - 120	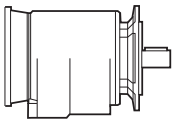	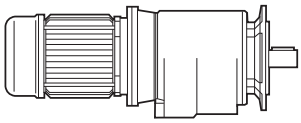	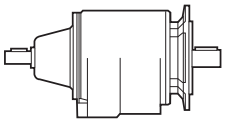	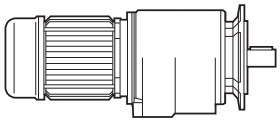
P/F 50 - 60 - 80 - 120	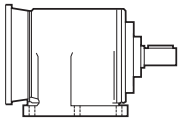	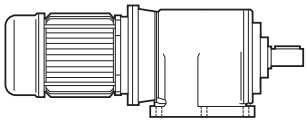	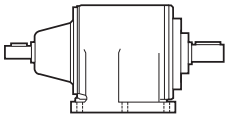	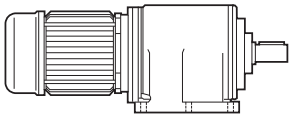
P/F1 P/F2 P/F3 50 - 120	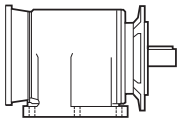	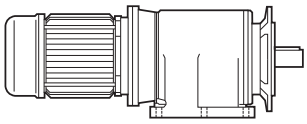	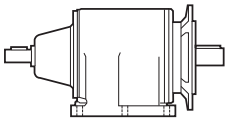	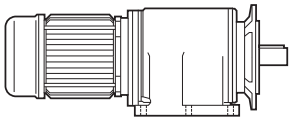

Posizione morsettiera
Terminal board position
Положение клеммной коробки

1− STANDARD

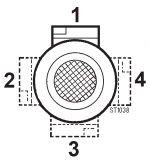

Senso di rotazione / *Direction of rotation* / Направление вращения

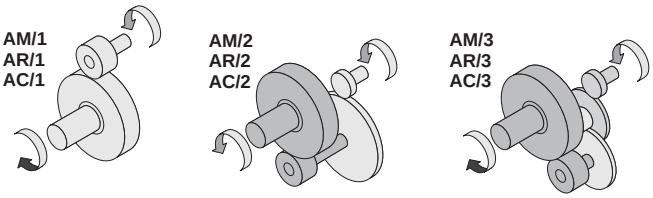

1.4 Lubrificazione

1.4 Lubrication

1.4 Смазка

Lubrificazione riduttori
Gearboxes lubrication
Смазка редуктора

AM/1 - AR/1 - AC/1

Generalità
Si consiglia l'uso di oli a base sintetica. (Vedere a tale proposito le indicazioni riportate nel capitolo A, paragrafo 1.4)
Nella tabella Tab. 2.1 sono riportati i quantitativi di olio necessari per il corretto funzionamento dei riduttori.

General information
The use of synthetic oil is recommended (see details in Chapter A, paragraph 1.4).
Tab. 2.1 shows the quantities of oil required for correct in-line gearbox performance.

Общая информация
Рекомендуется использовать синтетические масла (см. Главу А, параграф 1.4.) Таблица 2.1 отображает необходимое количество масла в зависимости от монтажного положения

Prescrizioni in fase d'ordine e stato di fornitura
I riduttori delle grandezze 32,40,50,60 sono forniti completi di olio sintetico di viscosità ISO 320. Per questi riduttori **è necessario** specificare la posizione di montaggio.
I riduttori nelle grandezze 80,100 sono forniti predisposti per lubrificazione ad olio ma privi di lubrificante il quale potrà essere fornito a richiesta.
Per questi riduttori **è necessario** specificare la posizione di montaggio.

Ordering phase requirements and state of supply
*In-line gearbox sizes 32,40,50,60 are supplied with ISO 320 viscosity synthetic oil. It **is necessary** to specify mounting position with these in-line gearboxes.*

Size 80,100 in-line gearboxes require oil lubrication but are supplied without lubricant that can be requested separately.
*It **is necessary** to specify the mounting position with these gearboxes.*

Условия к заказу изделия
Соосные редукторы габаритов 32, 40, 50, 60 поставляются заправленными синтетическим маслом вязкостью ISO 320 сСт.
Необходимо указать требуемое монтажное положение для данных редукторов.

Редукторы 80 и 100 типоразмеров поставляются без смазки, которая должна быть заказана отдельно.
Необходимо указать требуемое монтажное положение для данных редукторов.

Posizioni di montaggio

Mounting positions

Монтажное положение

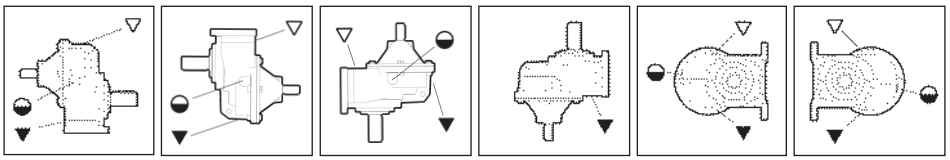

M1 M2 M3 M4 M5 M6

▽ Carico / *Breather plug* / Воздушный клапан
◒ Livello / *Level plug* / Уровневая пробка
▼ Scarico / *Drain plug* / Сливная пробка

Tab. 2.1

Quantità di lubrificante / *Lubricant Quantity* / Количество смазки (кг)									
AR AM - AC	Posizioni di montaggio / *Mounting Positions* / Монтажные положения							* n°. tappi olio * *No.of plugs* Anzahl Кол-во пробок	Pos. montaggio *Mounting position* Указание монтажного положения
	M1	M2	M3	M4	M5	M6	Stato di fornitura *State of supply* Состояние поставки		
32	0.100						Riduttori forniti completi di olio sintetico *Gearboxes suplied with synthetic oil* Редукторы поставляются заправленными синтетическим маслом	1	**Non Necessaria *Not Necessary* Не требуется**
40	0.160	0.270	0.180	0.270	0.160	0.160		1	**Necessaria *Necessary* Обязательно**
50	0.300	0.300	0.200	0.300	0.200	0.200		1	
60	0.470	0.640	0.570	0.750	0.570	0.570		1	
80	1.05	1.05	1.35	1.65	1.4	1.4	Riduttori predisposti per lubrificazione ad olio *Gearboxes suplied ready for oil lubrication* Редукторы подготовленные к смазке	4	**Necessaria *Necessary* Обязательно**
100	2.50	3.00	3.00	3.30	3.00	3.00			
Le quantità di olio sono approssimative; per una corretta lubrificazione occorre fare riferimento al livello segnato sul riduttore.					Oil quantities listed in the table are approximate; to ensure correct lubrication, please refer to the level mark on the gear unit.			Приведенные значения необходимого количества масла приблизительны. При заправке редуктора маслом ориентируйтесь по пробке уровня масла.	

ATTENZIONE

A) Se in fase d'ordine la posizione di montaggio è omessa, il riduttore verrà fornito con i tappi predisposti per la posizione M1.
B) Il tappo di sfiato è allegato solo nei riduttori che hanno più di un tappo olio.
D) Eventuali forniture con predisposizioni tappi diverse da quella indicata in tabella, dovranno essere concordate.
E) Nei riduttori dove è necessario specificare la posizione di montaggio, la posizione richiesta è indicata nella targhetta del riduttore.

WARNING

A) It is necessary to specify the mounting position when ordering. If the mounting position is not specified in the ordering phase, the gearbox supplied will have plugs pre-arranged for position M1.
B) A breather plug is supplied only with gearboxes that have more than one oil plug.
C) The supply of gearboxes with different plug pre-arrangements has to be agreed with the manufacturer.
D) *The gearboxes that need a specific assembling position have the indication of it on the label of the gearbox.*

ACHTUNG

A) Если при заказе монтажное положение не было указано, редуктор будет укомплектован пробками для монтажной позиции M1.

B) Воздушными клапанами комплектуются только редукторы, имеющие более, чем одну пробку.

C) Иные варианты установки пробок должны быть согласованы с производителем

D) Для редукторов, в маркировке которых необходимо указывать монтажное положение, оно указывается на заводской табличке.

Lubrificazione riduttori
Gearboxes lubrication
Смазка редукторов

AM/2-3 - AR/2-3 - AC/2-3

Generalità
Si consiglia l'uso di oli a base sintetica. (Vedere a tale proposito le indicazioni riportate nel capitolo A, paragrafo 1.4.). Nella tabella 2.2 sono riportati i quantitativi di olio necessari per il corretto funzionamento dei riduttori.

Prescrizioni in fase d'ordine e stato di fornitura
i riduttori delle grandezze 25,35,40,50 sono forniti completi di olio sintetico di viscosità ISO 320. Per questi riduttori **è necessario** specificare la posizione di montaggio.

I riduttori nelle grandezze 60,80,100,120 sono forniti predisposti per lubrificazione ad olio ma privi di lubrificante il quale potrà essere fornito a richiesta.
Per questi riduttori **è necessario** specificare la posizione di montaggio.

General information
The use of synthetic oil is recommended (see details in Chapter A, paragraph 1.4).
Table 2.2 shows the quantities of oil required for correct in-line gearbox performance.

Ordering phase requirements and state of supply
Gearbox sizes 25,35,40,50 are supplied with ISO 320 viscosity synthetic oil.
*It **is necessary** to specify the mounting position with these gearboxes*

Size 60,80,100,120 gearboxes require oil lubrication but are supplied without lubricant that can be requested separately.
*It **is necessary** to specify the mounting position with these gearboxes.*

Общая информация
Рекомендуется использовать синтетические масла (см. Главу А, параграф 1.4.) Таблица 2.1 отображает необходимое количество масла в зависимости от монтажного положения

Условия к заказу изделия
Редукторы габаритов 25,35, 40, 50, 60 поставляются заправленными синтетическим маслом вызкостью ISO 320 сСт.
Необходимо указать требуемое монтажное положение для данных редукторов.

Редукторы 60, 80, 100, 120 типоразмеров поставляются без смазки, которая должна быть заказана отдельно.
Необходимо указать требуемое монтажное положение для данных редукторов.

Posizioni di montaggio / *Mounting positions* / Монтажные положения

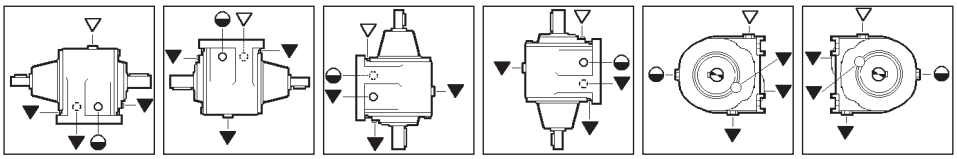

M1 **M2** **M3** **M4** **M5** **M6**

Carico / *Breather plug* / Воздушный клапан
Livello / *Level plug* / Уровневая
пробкаScarico / *Drain plug* / Сливная пробка

Tab. 2.2

AR AM - AC	Posizioni di montaggio /*Mounting Positions* / Монтажные положения M1	M2	M3	M4	M5	M6	Stato di fornitura *State of supply* Состояние поставки	* n°. tappi olio * *No.of plugs* Кол-во пробок	Posizione di montaggio *Mounting position* Указание монтажного положения
Quantità di lubrificante / *Lubricant Quantity* / Количество смазки (кг)									
25	0.120						Riduttori forniti completi di olio sintetico *Gearboxes suplied with synthetic oil* Редукторы поставляются заправленными синтетическим маслом	1	**Non Necessaria *Not Necessary* Не требуется**
35/2	0.150	0.200			0.150			1	**Necessaria *Necessary* Обязательно**
35/3	0.250		0.325	0.250	0.200			1	
41/2	0.290		0.240	0.300	0.200			1	
41/3	0.300		0.350		0.260			1	
45/2	0.350		0.400		0.350			1	
45/3	0.400		0.630	0.600	0.400			1	
50	0.950		1.35	1.35	0.950			1	
60	1.550		2.61	2.15	1.55		Riduttori predisposti per lubrificazione ad olio *Gearboxes suplied ready for oil lubrication* Редукторы подготовленные к смазке	4 (AMF, ACF, ARF) 5 (AMP,ACP, ARP)	**Necessaria *Necessary* Обязательно**
80	2.600		4.85	4.44	2.60			4 (AMF, ACF, ARF) 5 (AMP,ACP, ARP)	
100	5.550		9.60	9.60	5.55			4 (AMF, ACF, ARF) 5 (AMP,ACP, ARP)	
120	10.0		16.5	16.5	10.0			4 (AMF, ACF, ARF) 5 (AMP,ACP, ARP)	
Le quantità di olio sono approssimative; per una corretta lubrificazione occorre fare riferimento al livello segnato sul riduttore.					Oil quantities listed in the table are approximate; to ensure correct lubrication, please refer to the level mark on the gear unit.			Приведенные значения необходимого количества масла приблизительны. При заправке редуктора маслом ориентируйтесь по пробке уровня масла.	

ATTENZIONE

A) Se in fase d'ordine la posizione di montaggio è omessa, il riduttore verrà fornito con i tappi predisposti per la posizione M1.
B) Il tappo di sfiato è allegato solo nei riduttori che hanno più di un tappo olio.
C) Eventuali forniture con predisposizioni tappi diverse da quella indicata in tabella, dovranno essere concordate.
D) Nei riduttori dove è necessario specificare la posizione di montaggio, la posizione richiesta è indicata nella targhetta del riduttore.

WARNING

A) It is necessary to specify the mounting position when ordering. If the mounting position is not specified in the ordering phase, the gearbox supplied will have plugs pre-arranged for position M1.
B) A breather plug is supplied only with gearboxes that have more than one oil plug.
C) The supply of gearboxes with different plug pre-arrangements has to be agreed with the manufacturer.
E) The gearboxes that need a specific assembling position have the indication of it on the label of the gearbox.

ВНИМАНИЕ

A) Если при заказе монтажное положение не было указано, редуктор будет укомплектован пробками для монтажной позиции M1.

C) Воздушными клапанами комплектуются только редукторы, имеющие более, чем одну пробку.

D) Иные варианты установки пробок должны быть согласованы с производителем

E) Для редукторов, в маркировке которых необходимо указывать монтажное положение, оно указывается на заводской табличке.

1.5 Carichi radiali e assiali

Quando la trasmissione del moto avviene tramite meccanismi che generano carichi radiali sull'estremità dell'albero,è necessario verificare che i valori risultanti non eccedono quelli indicati nelle tabelle.

Nella Tab. 2.3 sono riportati i valori dei carichi radiali ammissibili per l'albero veloce (Fr_1). Come carico assiale ammissibile contemporaneo si ha:

$$Fa_1 = 0.2 \times Fr_1$$

1.5 Axial and overhung loads

Should transmission movement determine radial loads on the angular shaft end, it is necessary to make sure that resulting values do not exceed the ones indicated in the tables.

In Table 2.3 permissible radial load for input shaft are listed (Fr_1). Contemporary permissible axial load is given by the following formula:

$$Fa_1 = 0.2 \times Fr_1$$

1.5 Радиальная и осевая нагрузки

При передаче вращения через механизмы, создающие радиальную нагрузку на вал (шкивы, муфты, звездочки), необходимо проверить, чтобы значения этих нагрузок не превышали указанные в таблице.

В таблице 2.3 приведены допустимые радильной нагрузки (Fr_1) для входного вала. Для определения допустимой аксиальной нагрузки используйте формулу:

$$Fa_1 = 0.2 \times Fr_1$$

B

AR/1

Tab. 2.3

n_1 min^{-1}	Fr_1 (N)					
	AR../1					
	32	**40**	**50**	**60**	**80**	**100**
2800	170	320	430	520	600	1000
1400	220	400	550	700	800	1200
900	250	450	600	800	920	1300
500	300	500	850	1100	1300	1500

AR/2
AR/3

n_1 min^{-1}	Fr_1 (N)									
	AR									
	25	**35**	**41**	**45**	**40**	**50**	**60**	**80**	**100**	**120**
2800	—-	—-	—-	—-	320	430	520	600	1000	1250
1400	—-	—-	—-	—-	400	550	700	800	1200	1500
900	—-	—-	—-	—-	450	600	800	920	1300	1600
500	—-	—-	—-	—-	500	850	1100	1300	1500	1800

In Tab. 2.4 sono riportati i valori dei carichi radiali ammissibili per l'albero lento (Fr_2) . Come carico assiale ammissibile contemporaneo si ha:

$$Fa_2 = 0.2 \times F_{r2}$$

In Table 2.4 permissible radial loads for output shaft are listed (Fr_2). Permissible axial load is given by the following formula:

$$Fa_2 = 0.2 \times Fr_2$$

В таблице 2.4 приведены допустимые радильной нагрузки (Fr_2) для выходного вала. Для определения допустимой аксиальной нагрузки используйте формулу:

$$Fa_2 = 0.2 \times Fr_2$$

AR/1

Tab. 2.4

n_2 min^{-1}	Fr_2 (N)					
	AR - AM - AC					
	32	**40**	**50**	**60**	**80**	**100**
2400	-	600	1250	1350	1900	2500
1850	-	650	1250	1450	2100	2800
1250	530	700	1500	1650	2450	3000
1100	570	720	1500	2000	2450	3500
830	630	750	1500	2300	2600	3600
630	700	850	1800	2400	2900	3700
500	700	950	2000	2600	3400	3800
400	740	1000	2200	2900	3800	3900
300	880	1150	2300	3000	4200	4200
250	970	1250	2500	3400	4500	4500
200	1020	1370	2500	3800	5000	5500
160	1070	1500	2500	3800	5500	6500
130	1200	1500	2500	3800	6000	7500
100	1260	1500	2500	3800	6000	8500
80	1320	1500	2500	3800	6000	8500
> 70	1420	1500	2500	3800	6000	8500

AR/2 AR/3 AM/2 AM/3 AC/2 AC/3

Tab. 2.5

n_2 min^{-1}	Fr_2 (N) AR - AM - AC								
	25	**35**	**41**	**45**	**50**	**60**	**80**	**100**	**120**
1000	420	450	580	665	750	1100	2000	3800	4500
700	540	580	750	875	1000	1500	2500	5000	5800
500	650	700	900	1050	1200	1800	3000	6000	7000
350	650	740	1100	1250	1400	2300	3700	7000	8200
250	650	800	1300	1550	1800	2600	4500	8200	9500
200	650	850	1500	1850	2200	3300	6000	9000	10000
150	650	930	1600	2300	3000	4000	7500	10000	11500
100	650	1000	1700	2550	3400	4500	8300	11500	12500
80	650	1050	1850	2775	3700	5000	9000	12000	13500
60	650	1100	1900	2900	3900	5400	9600	13000	15000
30	650	1400	2300	3200	4100	6000	10000	14000	21000
> 15	650	1800	2700	3500	4300	6500	11000	15000	25000

I carichi radiali indicati nelle tabelle si intendono applicati a metà della sporgenza dell'albero standard e sono riferiti ai riduttori operanti con fattore di servizio 1. Per le sporgenze fornite in alternativa, fare riferimento alla sporgenza standard.
Valori intermedi relativi a velocità non riportate possono essere ottenuti per interpolazione considerando però che Fr_1 a 500 min^{-1} e Fr_2 a 15 min^{-1} rappresentano i carichi massimi consentiti.
Per i carichi non agenti sulla mezzeria dell'albero lento o veloce si ha:

a 0.3 della sporgenza:
$Fr_x = 1.25 \times F_{r1-2}$
a 0.8 dalla sporgenza:
$Fr_x = 0.8 \times F_{r1-2}$

The radial loads shown in the tables are applied on the centre line of the standard shaft extension and are related to gearboxes working with service factor 1. With reference to alternative values of shaft extension, refer to standard shaft extension.
Intermediate values of speeds that are not listed can be obtained through interpolation but it must be considered that Fr_1 at 500 min^{-1} and Fr_2 at 15 min^{-1} represent the maximum allowable loads.
For loads which are not applied on the centre line of the output or input shaft, following values will be obtained:

at 0.3 from extension:
$Fr_x = 1.25 \times F_{r1-2}$
at 0.8 from extension:
$Fr_x = 0.8 \times F_{r1-2}$

Радиальные нагрузки указанные в таблицах соответствуют точке приложения усилия к центру вала и применимы к редукторам с сервис-факторам 1. Не указанные промежуточные значения скоростей, могут быть получены путем интерполяции, но необходимо учитывать, что F_{r1} при 500 min^{-1} и F_{r2} при 15 min^{-1} представляют собой максимально допустимые нагрузки. Значения нагрузок, которые приложены не по осевой линии выходного вала могут быть будут получены расчетом:

при 0.3L:
$Fr_x = 1.25 \times Fr_{1-2}$
при 0.8L:
$Fr_x = 0.8 \times Fr_{1-2}$

Tab. 2.6

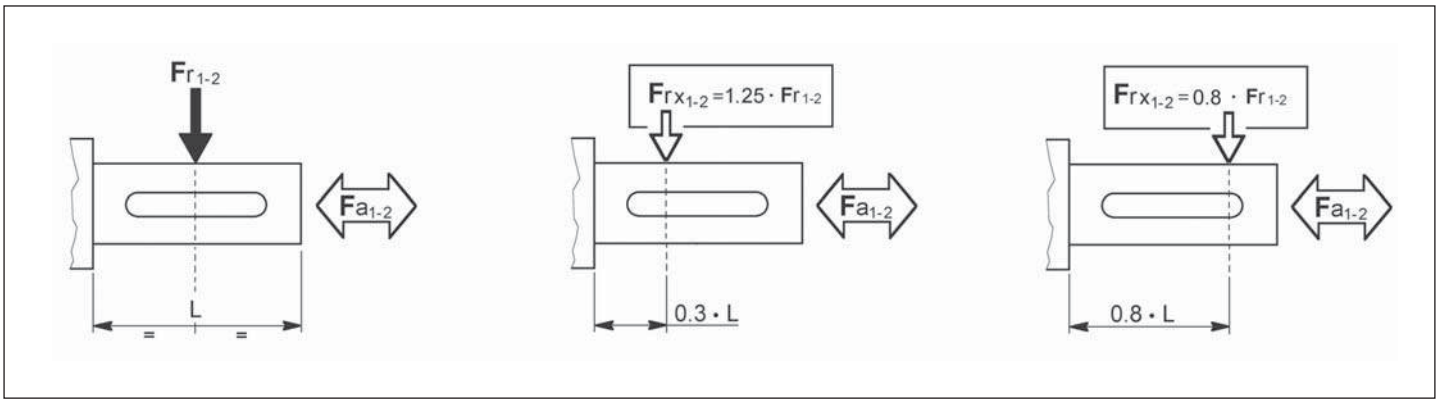

1.6 Prestazioni riduttori AR — *1.6 AR gearboxes performances* — 1.6 Характеристики редукторов AR

AR 25/2

1.8 kg

ir	n_1 = 2800 min^{-1}				n_1 = 1400 min^{-1}				n_1 = 900 min^{-1}				n_1 = 500 min^{-1}				IEC
	n_2	T_{2M}	P	RD	n_2	T_{2M}	P	RD	n_2	T_{2M}	P	RD	n_2	T_{2M}	P	RD	
	min^{-1}	Nm	kW	%	min^{-1}	Nm	kW	%	min^{-1}	Nm	kW	%	min^{-1}	Nm	kW	%	
3.4	819	12	1.1	95	409	12	0.55	95	263	13	0.38	95	146	16	0.26	95	56 (B5 - B14) 63 (B5 - B14)
3.9	716	12	0.96	95	358	12	0.48	95	230	13	0.33	95	128	16	0.23	95	
4.8	579	12	0.78	95	289	12	0.39	95	186	13	0.27	95	103	16	0.18	95	
5.6	498	12	0.67	95	249	12	0.33	95	160	13	0.23	95	89	16	0.16	95	
7.2	389	12	0.52	95	194	12	0.26	95	125	13	0.18	95	69	16	0.12	95	
8.7	324	12	0.44	95	162	12	0.22	95	104	13	0.15	95	58	16	0.10	95	
9.0	310	12	0.42	95	155	14	0.24	95	100	14	0.15	95	55	14	0.09	95	
10.5	267	13	0.38	95	133	14	0.21	95	86	14	0.13	95	48	14	0.07	95	
13.4	208	13	0.30	95	104	15	0.17	95	67	15	0.11	95	37	15	0.06	95	
16.2	173	13	0.25	95	87	15	0.14	95	56	15	0.09	95	31	15	0.05	95	
17.9	157	14	0.24	95	78	15	0.13	95	50	15	0.08	95	28	15	0.05	95	

AR 25/3

1.8 kg

ir	n_1 = 2800 min^{-1}				n_1 = 1400 min^{-1}				n_1 = 900 min^{-1}				n_1 = 500 min^{-1}				IEC
	n_2	T_{2M}	P	RD	n_2	T_{2M}	P	RD	n_2	T_{2M}	P	RD	n_2	T_{2M}	P	RD	
	min^{-1}	Nm	kW	%	min^{-1}	Nm	kW	%	min^{-1}	Nm	kW	%	min^{-1}	Nm	kW	%	
18.9	148	15	0.25	93	74	19	0.16	93	48	22	0.12	93	26	22	0.07	93	56 (B5 - B14) 63 (B5 - B14)
23.4	120	15	0.20	93	60	19	0.13	93	38	22	0.10	93	21	22	0.05	93	
27.2	103	15	0.17	93	51	20	0.12	93	33	22	0.08	93	18	22	0.05	93	
31.9	88	18	0.18	93	44	17	0.08	93	28	17	0.05	93	16	17	0.03	93	
35.3	79	15	0.13	93	40	17	0.08	93	25	17	0.05	93	14	17	0.03	93	
41.8	67	18	0.14	93	33	22	0.08	93	22	22	0.05	93	12	22	0.03	93	
50.7	55	16	0.10	93	28	18	0.06	93	18	18	0.04	93	10	18	0.02	93	
59.6	47	17	0.09	93	23	19	0.05	93	15	19	0.03	93	8	19	0.02	93	
64.9	43	17	0.08	93	22	19	0.05	93	14	19	0.03	93	8	19	0.02	93	
78.0	36	17	0.07	93	18	20	0.04	93	12	20	0.03	93	6	20	0.01	93	
86.2	32	18	0.07	93	16	20	0.04	93	10	20	0.02	93	6	20	0.01	93	

N.B. Il riduttore grandezza 25 viene fornito esclusivamente nella configurazione motoriduttore o riduttore predisposto IEC.

NOTE. The gearbox size 25 is supplied only in the configuration gearmotor or gearbox arranged for the IEC motor connection.

ПРИМЕЧАНИЕ. Редуктор 25 габарита изготавливается только с фланцем IEC для монтажа электродвигателя.

1.6 Prestazioni riduttori AR — *1.6 AR gearboxes performances* — 1.6 Характеристики редукторов AR

AR 32/1

Kg 2.1

ir	n_1 = 2800 min^{-1}				n_1 = 1400 min^{-1}				n_1 = 900 min^{-1}				n_1 = 500 min^{-1}				IEC
	n_2	T_{2M}	P	RD	n_2	T_{2M}	P	RD	n_2	T_{2M}	P	RD	n_2	T_{2M}	P	RD	
	min^{-1}	Nm	kW	%	min^{-1}	Nm	kW	%	min^{-1}	Nm	kW	%	min^{-1}	Nm	kW	%	
1.8	1585	14.5	2.5	97	792	21.7	1.9	97	509	21.8	1.2	97	283	21.8	0.7	97	80 * (B5 - B14)
2.1	1350	14.9	2.2	97	675	22.6	1.7	97	434	22.7	1.1	97	241	22.8	0.6	97	
2.5	1139	16.1	2.0	97	569	23.7	1.5	97	366	23.8	0.9	97	203	23.8	0.5	97	
3.0	948	17.4	1.8	97	474	25.0	1.3	97	305	25.1	0.8	97	169	25.1	0.5	97	71 (B5 - B14)
3.4	831	17.6	1.6	97	416	25.9	1.2	97	267	25.9	0.7	97	148	25.9	0.4	97	
3.9	721	17.8	1.4	97	361	25.8	1.0	97	232	26.0	0.7	97	129	26.0	0.4	97	63 (B5 - B14)
4.5	618	17.8	1.2	97	309	26.5	0.9	97	199	26.5	0.6	97	110	26.5	0.3	97	
5.3	528	19.1	1.1	97	264	26.8	0.8	97	170	26.8	0.5	97	94	26.9	0.3	97	56 (B5)
6.5	434	16.9	0.8	97	217	20.9	0.5	97	139	22.3	0.3	97	77	24.3	0.2	97	

AR 35/2

Kg 2.6

ir	n_1 = 2800 min^{-1}				n_1 = 1400 min^{-1}				n_1 = 900 min^{-1}				n_1 = 500 min^{-1}				IEC
	n_2	T_{2M}	P	RD	n_2	T_{2M}	P	RD	n_2	T_{2M}	P	RD	n_2	T_{2M}	P	RD	
	min^{-1}	Nm	kW	%	min^{-1}	Nm	kW	%	min^{-1}	Nm	kW	%	min^{-1}	Nm	kW	%	
3.4	822	32	2.85	95	411	35	1.58	95	264	39	1.12	95	147	42	0.68	95	80 (B5 - B14)
4.0	696	34	2.62	95	348	38	1.45	95	224	42	1.03	95	124	46	0.63	95	
4.7	596	36	2.36	95	298	40	1.31	95	192	44	0.93	95	106	48	0.57	95	
5.4	517	36	2.05	95	259	40	1.14	95	166	44	0.80	95	92	48	0.49	95	
6.3	443	36	1.75	95	221	40	0.97	95	142	44	0.69	95	79	48	0.42	95	
7.3	381	41	1.70	95	191	45	0.94	95	123	50	0.67	95	68	54	0.41	95	
8.7	323	45	1.60	95	162	50	0.89	95	104	52	0.59	95	58	60	0.38	95	
10.1	277	45	1.37	95	138	50	0.76	95	89	53	0.52	95	49	60	0.33	95	
11.7	240	45	1.19	95	120	50	0.66	95	77	54	0.46	95	43	60	0.28	95	71 (B5 - B14)
13.6	205	45	1.02	95	103	50	0.56	95	66	55	0.40	95	37	60	0.24	95	
15.7	178	50	0.97	95	89	55	0.54	95	57	55	0.35	95	32	60	0.21	95	63 (B5 - B14)
18.1	154	50	0.84	95	77	55	0.47	95	50	55	0.30	95	28	60	0.18	95	
21.3	131	50	0.71	95	66	55	0.40	95	42	60	0.28	95	23	60	0.15	95	
25.2	111	51	0.63	95	56	57	0.35	95	36	60	0.24	95	20	60	0.13	95	
28.7	98	54	0.58	95	49	60	0.32	95	31	60	0.21	95	17	60	0.11	95	
33.4	84	45	0.42	95	42	50	0.23	95	27	50	0.15	95	15	50	0.08	95	
38.0	74	45	0.36	95	37	50	0.20	95	24	50	0.13	95	13	50	0.07	95	
45.1	62	45	0.31	95	31	50	0.17	95	20	50	0.11	95	11	50	0.06	95	

AR 35/3

Kg 3.3

ir	n_1 = 2800 min^{-1}				n_1 = 1400 min^{-1}				n_1 = 900 min^{-1}				n_1 = 500 min^{-1}				IEC
	n_2	T_{2M}	P	RD	n_2	T_{2M}	P	RD	n_2	T_{2M}	P	RD	n_2	T_{2M}	P	RD	
	min^{-1}	Nm	kW	%	min^{-1}	Nm	kW	%	min^{-1}	Nm	kW	%	min^{-1}	Nm	kW	%	
43.9	64	54	0.39	93	31.9	60	0.22	93	20.5	60	0.14	93	11.4	60	0.08	93	63 (B5 - B14)
50.6	55	54	0.34	93	27.7	60	0.19	93	17.8	60	0.12	93	9.9	60	0.07	93	
59.1	47	54	0.29	93	23.7	60	0.16	93	15.2	60	0.10	93	8.5	60	0.06	93	
68.1	41	54	0.25	93	20.5	60	0.14	93	13.2	60	0.09	93	7.3	60	0.05	93	
78.6	36	60	0.24	93	17.8	60	0.12	93	11.4	60	0.08	93	6.4	60	0.04	93	
92.4	30	60	0.20	93	15.1	60	0.10	93	9.7	60	0.07	93	5.4	60	0.04	93	56 (B5 - B14)
109.1	26	60	0.17	93	12.8	60	0.09	93	8.2	60	0.06	93	4.6	60	0.03	93	
124.3	23	60	0.15	93	11.3	60	0.08	93	7.2	60	0.05	93	4.0	60	0.03	93	
147.7	19	60	0.13	93	9.5	60	0.06	93	6.1	60	0.04	93	3.4	60	0.02	93	
164.7	17	50	0.10	93	8.5	50	0.05	93	5.5	50	0.03	93	3.0	50	0.02	93	
195.6	14	50	0.08	93	7.2	50	0.04	93	4.6	50	0.03	93	2.6	50	0.01	93	

* Il PAM 80 B5 è disponibile solo con corpo flangiato

*The PAM 80 B5 is only available on housings with output flanges

*PAM80B5 доступен только на исполнениях с выходным крепежным фланцем.

1.6 Prestazioni riduttori AR — *1.6 AR gearboxes performances* — 1.6 Характеристики редукторов AR

AR 40/1

3.1

ir	n_1 = 2800 min^{-1}				n_1 = 1400 min^{-1}				n_1 = 900 min^{-1}				n_1 = 500 min^{-1}				IEC
	n_2	T_{2M}	P	RD	n_2	T_{2M}	P	RD	n_2	T_{2M}	P	RD	n_2	T_{2M}	P	RD	
	min^{-1}	Nm	kW	%	min^{-1}	Nm	kW	%	min^{-1}	Nm	kW	%	min^{-1}	Nm	kW	%	
1.2	2400	30	7.8	97	1200	30	3.9	97	771	30	2.5	97	429	30	1.4	97	100-112 (B5 - B14)
1.5	1847	35	7.0	97	923	35	3.5	97	594	35	2.2	97	330	35	1.2	97	
1.7	1655	40	7.1	97	827	40	3.6	97	532	40	2.3	97	295	40	1.3	97	
2.0	1430	45	6.9	97	715	45	3.5	97	460	45	2.2	97	255	45	1.2	97	90 (B5 - B14)
2.2	1257	50	6.8	97	629	50	3.4	97	404	50	2.2	97	224	50	1.2	97	
2.6	1098	50	5.9	97	549	50	3.0	97	353	50	1.9	97	196	50	1.1	97	
3.2	881	50	4.8	97	441	50	2.4	97	283	50	1.5	97	157	50	0.8	97	80 (B5 - B14)
3.7	750	50	4.0	97	375	50	2.0	97	241	50	1.3	97	134	50	0.7	97	
4.9	569	45	2.8	97	285	45	1.4	97	183	45	0.9	97	102	50	0.5	97	71 (B5)
5.7	494	40	2.1	97	247	40	1.1	97	159	42	0.7	97	88	45	0.4	97	
7.0	400	38	1.6	97	200	38	0.8	97	129	39	0.5	97	71	43	0.3	97	63 (B5)

AR 41/2

3.1

7.5	372	72	3.0	95	186	80	.,6	95	120	87	1.1	95	66	87	0.64	95	
8.5	328	77	2.8	95	164	85	1.5	95	105	93	1.1	95	59	93	0.60	95	90 (B5 - B14
10.5	268	81	2.4	95	134	90	1.3	95	86	98	0.93	95	48	98	0.52	95	
12.1	232	86	2.2	95	116	95	1.2	95	74	103	0.85	95	41	103	0.47	95	
13.0	215	92	2.2	95	107	102	1.2	95	69	111	0.85	95	38	111	0.47	95	80 (B5 - B14)
15.3	183	95	1.9	95	91	105	1.1	95	59	114	0.74	95	33	114	0.41	95	
18.3	153	95	1.6	95	76	105	0.88	95	49	114	0.62	95	27	114	0.34	95	71 (B5-B14)
20.2	139	95	1.4	95	69	105	0.80	95	45	114	0.56	95	25	114	0.31	95	
23.9	117	95	1.2	95	59	105	0.68	95	38	114	0.47	95	21	114	0.26	95	
28.6	98	95	1.0	95	49	105	0.57	95	31	114	0.40	95	17	114	0.22	95	63 (B5-B14)
37.2	75	95	0.78	95	38	105	0.44	95	24	114	0.30	95	13	114	0.17	95	
49.6	56	95	0.59	95	28	105	0.33	95	18	114	0.23	95	10	114	0.13	95	

AR 41/3

3.5

54.4	52	99	0.57	93	26	110	0.32	93	17	120	0.22	93	9,2	120	0.12	93	
61.3	46	99	0.51	93	23	110	0.28	93	15	120	0.20	93	8,2	120	0.11	93	
70.8	40	99	0.44	93	20	110	0.24	93	13	120	0.17	93	7,1	120	0.10	93	
82.5	34	99	0.38	93	17	110	0.21	93	11	120	0.15	93	6,1	120	0.08	93	
91.0	31	99	0.34	93	15	110	0.19	93	10	120	0.13	93	5,5	120	0.07	93	71 (B5-B14)
107.4	26	99	0.29	93	13	110	0.16	93	8.4	120	0.11	93	4,7	120	0.06	93	
118.4	24	99	0.26	93	12	110	0.15	93	7.6	120	0.10	93	4,2	120	0.06	93	63 (B5-B14)
128.6	22	99	0.24	93	11	110	0.13	93	7.0	120	0.09	93	3,9	120	0.05	93	
140.0	20	99	0.22	93	10	110	0.12	93	6.4	120	0.09	93	3,6	120	0.05	93	
167.4	17	99	0.19	93	8.4	110	0.10	93	5.4	120	0.07	93	3,0	120	0.04	93	
223.2	13	99	0.14	93	6.3	110	0.08	93	4.0	120	0.05	93	2,2	120	0.03	93	

N.B. Per i riduttori evidenziati dal doppio bordo nella colonna delle potenze è necessario verificare lo scambio termico del riduttore (A-1.5). Per maggiori informazioni contattare il nostro uff. tecnico.

NOTE. Pay attention please to the frame around the input power value: for this gearboxes it's important to check the thermal capacity (A-1.5). For details please contact our technical office.

ПРИМЕЧАНИЕ. Обратите внимание на характеристики редукторов обведенных рамкой. Для этих редукторов необходимо провести проверку термической мощности (A-1.5). Для получения информации обращайтесь в наш технический отдел.

1.6 Prestazioni riduttori AR

1.6 AR gearboxes performances

1.6 Характеристики редукторов AR

AR 45/2

4.1

ir	n_1 = 2800 min^{-1}				n_1 = 1400 min^{-1}				n_1 = 900 min^{-1}				n_1 = 500 min^{-1}				IEC
	n2	T2M	P	RD	n2	T2M	P	RD	n2	T2M	P	RD	n2	T2M	P	RD	
	min-1	Nm	kW	%	min-1	Nm	kW	%	min-1	Nm	kW	%	min-1	Nm	kW	%	
5.8	486	104	5.5	95	243	115	3.1	95	156	125	2.2	95	87	125	1.2	95	100 (B5 - B14)
6.4	435	108	5.2	95	218	120	2.9	95	140	131	2.0	95	78	131	1.1	95	
7.4	376	117	4.9	95	188	130	2.7	95	121	142	1.9	95	67	142	1.0	95	
8.5	331	126	4.6	95	165	140	2.6	95	106	152	1.8	95	59	152	0.99	95	
9.7	289	135	4.3	95	144	150	2.4	95	93	163	1.7	95	52	163	0.93	95	90 (B5 - B14)
12.1	232	144	3.7	95	116	160	2.0	95	75	174	1.4	95	41	174	0.80	95	
14.2	197	153	3.3	95	99	170	1.8	95	63	185	1.3	95	35	185	0.72	95	
16.9	165	144	2.6	95	83	160	1.5	95	53	174	1.0	95	30	174	0.57	95	80 (B5 - B14)
18.7	150	158	2.6	95	75	175	1.4	95	48	191	1.0	95	27	191	0.56	95	
21.5	130	162	2.3	95	65	180	1.3	95	42	196	0.90	95	23	196	0.50	95	
26.6	105	144	1.7	95	53	160	0.90	95	34	174	0.65	95	19	174	0.36	95	71 (B5-B14)
30.2	93	144	1.5	95	46	160	0.82	95	30	174	0.57	95	17	174	0.32	95	
37.3	75	153	1.3	95	38	170	0.70	95	24	185	0.49	95	13	185	0.27	95	
45.9	61	153	1.0	95	31	170	0.57	95	20	185	0.40	95	11	185	0.22	95	

AR 45/3

4.6

41.4	68	180	1.4	93	34	200	0.76	93	22	218	0.53	93	12	218	0.30	93	
44.6	63	162	1.1	93	31	180	0.64	93	20	196	0.45	93	11	196	0.25	93	
51.6	54	180	1.1	93	27	200	0.61	93	17	218	0.43	93	10	218	0.24	93	
60.6	46	180	0.9	93	23	200	0.52	93	15	218	0.36	93	8.2	218	0.20	93	
72.4	39	162	0.71	93	19	180	0.39	93	12	196	0.27	93	6.9	196	0.15	93	80 (B5-B14)
79.8	35	180	0.71	93	18	200	0.39	93	11	218	0.28	93	6.3	218	0.15	93	
92.0	30	180	0.62	93	15	200	0.34	93	10	218	0.24	93	5.4	218	0.13	93	71 (B5-B14)
113.7	25	162	0.45	93	12	180	0.25	93	7.9	196	0.17	93	4.4	196	0.10	93	
129.1	22	162	0.40	93	11	180	0.22	93	7.0	196	0.15	93	3.9	196	0.09	93	
159.5	18	162	0.32	93	8.8	180	0.18	93	5.6	196	0.12	93	3.1	196	0.07	93	
196.0	14	162	0.26	93	7.1	180	0.14	93	4.6	196	0.10	93	2.6	196	0.06	93	

N.B. Per i riduttori evidenziati dal doppio bordo nella colonna delle potenze è necessario verificare lo scambio termico del riduttore (A-1.5). Per maggiori informazioni contattare il nostro uff. tecnico.

NOTE. Pay attention please to the frame around the input power value: for this gearboxes it's important to check the thermal capacity (A-1.5). For details please contact our technical office.

ПРИМЕЧАНИЕ. Обратите внимание на характеристики редукторов обведенных рамкой. Для этих редукторов необходимо провести проверку термической мощности (A-1.5). Для получения информации обращайтесь в наш технический отдел.

1.6 Prestazioni riduttori AR — *1.6 AR gearboxes performances* — 1.6 Характеристики редукторов AR

AR 50/1

5.2

ir	n_1 = 2800 min^{-1}				n_1 = 1400 min^{-1}				n_1 = 900 min^{-1}				n_1 = 500 min^{-1}				IEC
	n_2	T_{2M}	P	RD	n_2	T_{2M}	P	RD	n_2	T_{2M}	P	RD	n_2	T_{2M}	P	RD	
	min^{-1}	Nm	kW	%	min^{-1}	Nm	kW	%	min^{-1}	Nm	kW	%	min^{-1}	Nm	kW	%	
1.3	2240	55	13.3	97	1120	55	6.6	97	720	55	4.3	97	400	55	2.4	97	112 (B5 - B14)
1.5	1830	63	12.4	97	915	63	6.2	97	588	63	4.0	97	327	63	2.2	97	
1.8	1547	80	13.4	97	773	80	6.7	97	497	80	4.3	97	276	80	2.4	97	
2.0	1373	80	11.8	97	686	80	5.9	97	441	80	3.8	97	245	80	2.1	97	100 (B5 - B14)
2.5	1129	80	9.8	97	565	80	4.9	97	363	80	3.1	97	202	80	1.7	97	
2.8	986	85	9.0	97	493	85	4.5	97	317	85	2.9	97	176	85	1.6	97	90 (B5 - B14)
3.1	915	90	8.9	97	458	90	4.5	97	294	90	2.9	97	163	90	1.6	97	
3.3	851	90	8.3	97	426	90	4.1	97	274	90	2.7	97	152	90	1.5	97	
3.6	787	90	7.6	97	393	90	3.8	97	253	90	2.5	97	140	90	1.4	97	80 (B5 - B14)
3.9	724	90	7.0	97	362	90	3.5	97	233	90	2.3	97	129	90	1.3	97	
5.1	551	72	4.3	97	276	75	2.2	97	177	75	1.4	97	98	80	0.8	97	71 (B5)
5.8	480	63	3.3	97	240	65	1.7	97	154	65	1.1	97	86	73	0.7	97	
6.6	426	60	2.8	97	213	60	1.4	97	137	60	0.9	97	76	70	0.6	97	63 (B5)

AR 50/2

13

6.3	448	124	6.1	95	224	147	3.6	95	144	164	2.6	95	80	200	1.8	95	112 (B5 - B14)
7.4	379	128	5.4	95	190	153	3.2	95	122	171	2.3	95	68	200	1.5	95	
8.3	336	133	4.9	95	168	158	2.9	95	108	176	2.1	95	60	20	1.3	95	
9.2	304	137	4.6	95	152	163	2.7	95	98	182	2.0	95	54	200	1.2	95	100 (B5 - B14)
10.4	269	144	4.3	95	134	171	2.5	95	86	191	1.8	95	48	200	1.1	95	
12.5	224	147	3.6	95	112	175	2.2	95	72	195	1.6	95	40	210	0.93	95	90 (B5 - B14)
14.6	192	153	3.2	95	96	182	1.9	95	62	203	1.4	95	34	210	0.80	95	
16.8	167	158	2.9	95	83	188	1.7	95	54	210	1.2	95	30	210	0.69	95	
18.2	154	156	2.6	95	77	184	1.6	95	50	200	1.1	95	28	200	0.61	95	80 (B5 - B14)
20.8	135	159	2.4	95	67	189	1.4	95	43	200	0.96	95	24	200	0.63	95	
23.8	118	171	2.2	95	59	203	1.3	95	38	210	0.87	95	21	210	0.49	95	71 (B5)
25.9	108	168	2.0	95	54	200	1.2	95	35	200	0.77	95	19	200	0.43	95	
29.8	94	168	1.7	95	47	200	1.0	95	30	200	0.67	95	17	200	0.37	95	63 (B5)

AR 50/3

13

28.5	98	182	2.0	93	49	216	1.2	93	32	216	0.77	93	18	216	0.43	93	
32.4	86	188	1.8	93	43	216	1.1	93	28	216	0.68	93	15	216	0.38	93	
35.6	79	186	1.6	93	39	208	0.92	93	25	208	0.59	93	14	208	0.33	93	
40.5	69	191	1.5	93	35	208	0.81	93	22	208	0.52	93	12	208	0.29	93	
46.2	61	205	1.4	93	30	216	0.74	93	19	216	0.47	93	11	216	0.26	93	90 (B5 - B14)
50.8	55	210	1.3	93	28	216	0.67	93	18	216	0.43	93	9.8	216	0.24	93	
54.3	52	216	1.3	93	26	216	0.63	93	17	216	0.40	93	9.2	216	0.22	93	80 (B5 - B14)
65.9	42	208	1.0	93	21	208	0.50	93	14	208	0.32	93	7.6	208	0.18	93	
71.5	39	216	0.95	93	20	216	0.48	93	13	216	0.31	93	7.0	216	0.17	93	
77.5	36	216	0.88	93	18	216	0.44	93	12	216	0.28	93	6.5	216	0.16	93	71 (B5)
89.3	31	216	0.76	93	16	216	0.38	93	10	216	0.25	93	5.6	216	0.14	93	63 (B5)
102.1	27	208	0.64	93	14	208	0.32	93	8.8	208	0.21	93	4.9	208	0.11	93	
117.6	24	216	0.58	93	12	216	0.29	93	7.7	216	0.19	93	4.3	216	0.10	93	
127.5	22	216	0.53	93	11	216	0.27	93	7.1	216	0.17	93	3.9	216	0.10	93	
146.9	19	208	0.45	93	9.5	208	0.22	93	6.1	208	0.14	93	3.4	208	0.08	93	
181.5	15	205	0.35	93	7.7	205	0.18	93	4.9	205	0.11	93	2.7	205	0.06	93	

N.B. Per i riduttori evidenziati dal doppio bordo nella colonna delle potenze è necessario verificare lo scambio termico del riduttore (A-1.5). Per maggiori informazioni contattare il nostro uff. tecnico.

NOTE. Pay attention please to the frame around the input power value: for this gearboxes it's important to check the thermal capacity (A-1.5). For details please contact our technical office.

ПРИМЕЧАНИЕ. Обратите внимание на характеристики редукторов обведенных рамкой. Для этих редукторов необходимо провести проверку термической мощности (A-1.5). Для получения информации обращайтесь в наш технический отдел.

1.6 Prestazioni riduttori AR — *1.6 AR gearboxes performances* — 1.6 Характеристики редукторов AR

AR 60/1

Kg 16

ir	n_1 = 2800 min^{-1}				n_1 = 1400 min^{-1}				n_1 = 900 min^{-1}				n_1 = 500 min^{-1}				IEC
	n_2	T_{2M}	P	RD	n_2	T_{2M}	P	RD	n_2	T_{2M}	P	RD	n_2	T_{2M}	P	RD	
	min^{-1}	Nm	kW	%	min^{-1}	Nm	kW	%	min^{-1}	Nm	kW	%	min^{-1}	Nm	kW	%	
1.3	2133	130	29.9	97	1067	130	15.0	97	686	130	9.6	97	381	130	5.3	97	132 (B5 - B14)
1.6	1704	140	25.8	97	852	140	12.9	97	548	140	8.3	97	304	140	4.6	97	
1.8	1517	145	23.7	97	758	145	11.9	97	488	145	7.6	97	271	145	4.2	97	
2.1	1344	160	23.2	97	672	160	11.6	97	432	160	7.5	97	240	160	4.1	97	112 (B5 - B14)
2.4	1185	170	21.7	97	592	170	10.9	97	381	170	7.0	97	212	170	3.9	97	
2.7	1037	170	19.0	97	519	170	9.5	97	333	170	6.1	97	185	170	3.4	97	100 (B5 - B14)
2.9	967	170	17.8	97	484	170	8.9	97	311	170	5.7	97	173	170	3.2	97	
3.4	835	170	15.3	97	418	170	7.7	97	268	170	4.9	97	149	170	2.7	97	
3.6	772	170	14.2	97	386	170	7.1	97	248	170	4.6	97	138	170	2.5	97	90(B5 - B14)
4.7	597	170	11.0	97	298	170	5.5	97	192	170	3.5	97	107	170	2.0	97	
5.2	542	158	9.2	97	271	164	4.8	97	174	164	3.1	97	97	164	1.7	97	80 (B5 - B14)
5.9	473	142	7.2	97	236	146	3.7	97	152	155	2.5	97	84	160	1.5	97	
6.8	410	125	5.5	97	205	125	2.8	97	132	132	1.9	97	73	142	1.1	97	71 (B5)

AR 60/2

Kg 20

7.9	355	285	11.1	95	177	338	6.6	95	114	378	4.8	95	63	410	2.9	95	132 (B5 - B14)
8.9	315	293	10.2	95	157	349	6.1	95	101	389	4.3	95	56	410	2.5	95	
10.1	279	301	9.2	95	139	359	5.5	95	90	400	3.9	95	50	410	2.2	95	
11.3	247	308	8.4	95	123	367	5.0	95	79	409	3.6	95	44	410	2.0	95	112 (B5 - B14)
12.4	226	315	7.9	95	113	375	4.7	95	73	418	3.4	95	40	450	2.0	95	
14.3	195	327	7.0	95	98	389	4.2	95	63	435	3.0	95	35	450	1.7	95	100 (B5 - B14)
15.5	181	338	6.7	95	90	402	4.0	95	58	449	2.9	95	32	450	1.6	95	
18.3	153	318	5.4	95	77	378	3.2	95	49	410	2.2	95	27	410	1.2	95	
19.7	142	326	5.1	95	71	388	3.0	95	46	410	2.1	95	25	410	1.1	95	90 (B5 - B14)
22.1	127	367	5.1	95	63	436	3.0	95	41	450	2.0	95	23	450	1.1	95	
25.3	111	378	4.6	95	55	450	2.7	95	36	450	1.8	95	20	450	0.98	95	80 (B5 - B14)
28.1	100	345	3.8	95	50	410	2.2	95	32	410	1.4	95	18	410	0.80	95	
32.3	87	345	3.3	95	43	410	2.0	95	28	410	1.3	95	16	410	0.70	95	71 (B5)

AR 60/3

Kg 20

28.0	100	387	4.4	93	50	460	2.6	93	32	460	1.7	93	18	460	0.92	93	
31.6	89	400	4.0	93	44	460	2.3	93	28	460	1.5	93	16	460	0.82	93	
35.7	78	376	3.3	93	39	420	1.9	93	25	420	1.2	93	14	420	0.66	93	
40.3	69	386	3.0	93	35	420	1.6	93	22	420	1.1	93	12	420	0.59	93	
45.1	62	436	3.0	93	31	460	1.6	93	20	460	1.0	93	11	460	0.57	93	100 (B5 - B14)
51.0	55	447	2.8	93	27	460	1.4	93	18	460	0.91	93	9.8	460	0.51	93	
55.2	51	460	2.6	93	25	460	1.3	93	16	460	0.84	93	9.1	460	0.47	93	90 (B5 - B14)
60.3	46	420	2.2	93	23	420	1.1	93	15	420	0.71	93	8.3	420	0.39	93	
72.7	39	460	2.0	93	19	460	1.0	93	12	460	0.64	93	6.9	460	0.36	93	
78.6	36	460	1.8	93	18	460	0.92	93	11	460	0.59	93	6.4	460	0.33	93	80 (B5 - B14)
90.4	31	460	1.6	93	15	460	0.80	93	10	460	0.52	93	5.5	460	0.29	93	
100.2	28	420	1.3	93	14	420	0.66	93	9.0	420	0.42	93	5.0	420	0.24	93	71 (B5)
112.2	25	460	1.3	93	12	460	0.65	93	8.0	460	0.42	93	4.5	460	0.23	93	
128.8	22	460	1.1	93	11	460	0.56	93	7.0	460	0.36	93	3.9	460	0.20	93	
143.0	20	420	0.93	93	9.8	420	0.46	93	6.3	420	0.30	93	3.5	420	0.17	93	
164.1	17	420	0.81	93	8.5	420	0.40	93	5.5	420	0.26	93	3.0	420	0.14	93	
185.2	15	420	0.71	93	7.5	420	0.36	93	4.8	420	0.23	93	2.7	420	0.13	93	

N.B. Per i riduttori evidenziati dal doppio bordo nella colonna delle potenze è necessario verificare lo scambio termico del riduttore (A-1.5). Per maggiori informazioni contattare il nostro uff. tecnico.

NOTE. Pay attention please to the frame around the input power value: for this gearboxes it's important to check the thermal capacity (A-1.5). For details please contact our technical office.

ПРИМЕЧАНИЕ. Обратите внимание на характеристики редукторов обведенных рамкой. Для этих редукторов необходимо провести проверку термической мощности (A-1.5). Для получения информации обращайтесь в наш технический отдел.

1.6 Prestazioni riduttori AR — *1.6 AR gearboxes performances* — 1.6 Характеристики редукторов AR

AR 80/1

21 Kg

ir	n_1 = 2800 min^{-1}				n_1 = 1400 min^{-1}				n_1 = 900 min^{-1}				n_1 = 500 min^{-1}				IEC
	n_2	T_{2M}	P	RD	n_2	T_{2M}	P	RD	n_2	T_{2M}	P	RD	n_2	T_{2M}	P	RD	
	min^{-1}	Nm	kW	%	min^{-1}	Nm	kW	%	min^{-1}	Nm	kW	%	min^{-1}	Nm	kW	%	
1.2	2355	260	66.1	97	1177	260	33.0	97	757	260	21.2	97	420	260	11.8	97	
1.4	2026	270	59.0	97	1013	270	29.5	97	651	270	19.0	97	362	270	10.5	97	160 (B5)
1.8	1532	280	46.3	97	766	280	23.2	97	492	280	14.9	97	274	280	8.3	97	
2.0	1375	305	45.3	97	687	305	22.6	97	442	305	14.5	97	245	305	8.1	97	132 (B5)
2.4	1179	330	42.0	97	589	330	21.0	97	379	330	13.5	97	211	330	7.5	97	
2.7	1044	330	37.2	97	522	330	18.6	97	336	330	12.0	97	186	330	6.6	97	112 (B5)
2.9	964	330	34.3	97	482	330	17.2	97	310	330	11.0	97	172	330	6.1	97	
3.3	844	330	30.1	97	422	330	15.0	97	271	330	9.7	97	151	330	5.4	97	100 (B5)
3.6	788	330	28.1	97	394	330	14.0	97	253	330	9.0	97	141	330	5.0	97	
4.8	585	330	20.8	97	293	330	10.4	97	188	330	6.7	97	104	330	3.7	97	90 (B5)
5.3	528	330	18.8	97	264	330	9.4	97	170	330	6.0	97	94	330	3.4	97	
5.8	480	330	17.1	97	240	330	8.5	97	154	330	5.5	97	86	330	3.1	97	80 (B5)
6.4	439	330	15.6	97	219	330	7.8	97	141	330	5.0	97	78	330	2.8	97	

AR 80/2

42 Kg

7.8	359	595	24	95	179	707	14.0	95	115	790	10.0	95	64	940	6.6	95	
8.7	322	612	22	95	161	728	12.9	95	103	813	9.3	95	57	940	6.0	95	160 (B5)
10.0	281	629	19.5	95	141	748	11.6	95	90	835	8.3	95	50	940	5.2	95	
11.1	252	644	17.9	95	126	766	10.7	95	81	855	7.6	95	45	940	4.7	95	132 (B5)
12.4	226	658	16.4	95	113	782	9.7	95	73	874	7.0	95	40	940	4.2	95	
14.2	198	684	14.9	95	99	813	8.9	95	64	908	6.4	95	35	940	3.7	95	112 (B5)
15.2	184	707	14.4	95	92	841	8.5	95	59	939	6.1	95	33	940	3.4	95	
18.1	155	728	12.4	95	78	866	7.4	95	50	940	5.2	95	28	940	2.9	95	100 (B5)
19.4	145	748	11.9	95	72	889	7.1	95	46	940	4.8	95	26	940	2.7	95	
22.7	123	766	10.4	95	62	910	6.2	95	40	940	4.1	95	22	940	2.3	95	90 (B5)
24.9	112	790	9.8	95	56	940	5.8	95	36	940	3.7	95	20	940	2.1	95	
28.9	97	790	8.4	95	48	940	5.0	95	31	940	3.2	95	17	940	1.8	95	80 (B5)
31.8	88	790	7.7	95	44	940	4.6	95	28	940	2.9	95	16	940	1.6	95	

AR 80/3

42 Kg

28.1	100	813	9.1	93	50	967	5.4	93	32	967	3.5	93	18	967	1.9	93	
31.7	88	841	8.4	93	44	967	4.8	93	28	967	3.1	93	16	967	1.7	93	
35.7	78	866	7.6	93	39	967	4.3	93	25	967	2.7	93	14	967	1.5	93	
40.3	69	889	6.9	93	35	967	3.8	93	22	967	2.4	93	12	967	1.3	93	
44.0	64	916	6.6	93	32	967	3.5	93	20	967	2.2	93	11	V	1.2	93	
50.9	55	940	5.8	93	27	967	3.0	93	18	967	1.9	93	9.8	967	1.1	93	112 (B5)
55.1	51	967	5.5	93	25	967	2.8	93	16	967	1.8	93	9.1	967	0.99	93	
65.7	43	967	4.6	93	21	967	2.3	93	14	967	1.5	93	7.6	967	0.83	93	100 (B5)
76.0	37	967	4.0	93	18	967	2.0	93	12	967	1.3	93	6.6	967	0.72	93	
82.2	34	967	3.7	93	17	967	1.9	93	11	967	1.2	93	6.1	967	0.66	93	90 (B5)
90.0	31	967	3.4	93	16	967	1.7	93	10	967	1.1	93	5.6	967	0.61	93	
104.8	27	967	2.9	93	13	967	1.6	93	8.6	967	0.94	93	4.8	967	0.52	93	80 (B5)
117.2	24	967	2.6	93	12	967	1.3	93	7.7	967	0.84	93	4.3	967	0.46	93	
134.3	21	967	2.3	93	10	967	1.1	93	6.7	967	0.73	93	3.7	967	0.41	93	
149.3	19	967	2.0	93	9.4	967	1.0	93	6.0	967	0.66	93	3.3	967	0.36	93	
171.2	16	967	1.8	93	8.2	967	0.89	93	5.3	967	0.57	93	2.9	967	0.32	93	
197.5	14	967	1.5	93	7.1	967	0.77	93	4.5	967	0.50	93	2.5	967	0.27	93	

N.B. Per i riduttori evidenziati dal doppio bordo nella colonna delle potenze è necessario verificare lo scambio termico del riduttore (A-1.5). Per maggiori informazioni contattare il nostro uff. tecnico.

NOTE Pay attention please to the frame around the input power value: for this gearboxes it's important to check the thermal capacity (A-1.5). For details please contact our technical office.

ПРИМЕЧАНИЕ. Обратите внимание на характеристики редукторов обведенных рамкой. Для этих редукторов необходимо провести проверку термической мощности (A-1.5). Для получения информации обращайтесь в наш технический отдел.

1.6 Prestazioni riduttori AR — *1.6 AR gearboxes performances* — 1.6 Характеристики редукторов AR

AR 100/1

Kg 55

ir	n_1 = 2800 min^{-1}				n_1 = 1400 min^{-1}				n_1 = 900 min^{-1}				n_1 = 500 min^{-1}				IEC
	n_2	T_{2M}	P	RD	n_2	T_{2M}	P	RD	n_2	T_{2M}	P	RD	n_2	T_{2M}	P	RD	
	min^{-1}	Nm	kW	%	min^{-1}	Nm	kW	%	min^{-1}	Nm	kW	%	min^{-1}	Nm	kW	%	
1.3	2178	480	112.8	97	1089	480	56.4	97	700	480	36.3	97	389	480	20.2	97	200 (B5)
1.9	1447	490	76.5	97	723	490	38.3	97	465	490	24.6	97	258	490	13.7	97	
2.2	1289	600	83.5	97	644	600	41.7	97	414	600	26.8	97	230	600	14.9	97	180 (B5)
3.0	947	600	61.3	97	474	600	30.7	97	304	600	19.7	97	169	600	11.0	97	
3.5	812	600	52.6	97	406	600	26.3	97	261	600	16.9	97	145	600	9.4	97	160 (B5)
3.9	717	600	46.4	97	359	600	23.2	97	230	600	14.9	97	128	600	8.3	97	
5.4	515	530	29.5	97	257	530	14.7	97	166	550	9.8	97	92	550	5.5	97	132 (B5-B14)
5.9	472	530	27.0	97	236	530	13.5	97	152	550	9.0	97	84	550	5.0	97	112 (B5)
6.9	404	460	20.1	97	202	480	10.5	97	130	500	7.0	97	72	550	4.3	97	
7.5	373	450	18.1	97	187	470	9.5	97	120	500	6.5	97	67	500	3.6	97	100 (B5)

AR 100/2

Kg 60

2.4	1148	913	115	95	574	1085	69	95	369	1212	49	95	205	1670	38	95	
2.7	1026	956	108	95	513	1136	64	95	330	1269	46	95	183	1747	35	95	
3.7	753	1026	85	95	376	1221	51	95	242	1363	36	95	134	1878	28	95	
4.9	569	1085	68	95	285	1291	40	95	183	1441	29	95	102	1930	22	95	
6.9	409	1136	51	95	204	1351	30	95	131	1509	22	95	73	1930	15.5	95	
7.5	375	1181	49	95	187	1404	29	95	120	1568	21	95	67	1930	14.2	95	
7.9	354	1221	48	95	177	1452	28	95	114	1621	20	95	63	1930	13.5	95	200 (B5)
8.9	316	1257	44	95	158	1495	26	95	101	1670	18.7	95	56	1930	12.0	95	
9.9	284	1291	40	95	142	1535	24	95	91	1714	17.2	95	51	1930	10.8	95	180 (B5)
11.1	253	1322	37	95	126	1572	22	95	81	1755	15.7	95	45	1930	9.6	95	
12.1	232	1351	35	95	116	1606	21	95	75	1794	14.7	95	41	1930	8.8	95	160 (B5)
14.1	199	1404	31	95	99	1670	18.3	95	64	1865	13.1	95	35	1930	7.5	95	132 (B5-B14)
15.9	176	1352	28	95	88	1726	16.7	95	56	1928	12.0	95	31	1930	6.7	95	
17.6	159	1395	26	95	80	1778	15.6	95	51	1930	10.9	95	28	1930	6.0	95	112 (B5)
19.9	141	1535	24	95	70	1825	14.1	95	45	1930	9.6	95	25	1930	5.3	95	
22.2	126	1572	22	95	63	1869	13.0	95	41	1930	8.6	95	23	1930	4.8	95	100 (B5)
24.2	116	1623	21	95	58	1930	12.3	95	37	1930	7.9	95	21	1930	4.4	95	
28.3	99	1623	17.7	95	50	1930	10.5	95	32	1930	6.8	95	18	1930	3.8	95	
30.3	93	1623	16.6	95	46	1930	9.8	95	30	1930	6.3	95	17	1930	3.5	95	
35.3	79	1623	14.2	95	40	1930	8.4	95	25	1930	5.4	95	14	1930	3.0	95	
38.3	73	1623	13.1	95	37	1930	7.8	95	24	1930	5.0	95	13	1930	2.8	95	

AR 100/3

Kg 60

29.1	96	1669	18.1	93	48	1985	10.7	93	31	1985	6.9	93	17	1985	3.8	93	
32.5	86	1726	16.8	93	43	1985	9.6	93	28	1985	6.2	93	15	1985	3.4	93	
36.4	77	1777	15.4	93	38	1985	8.6	93	25	1985	5.5	93	14	1985	3.1	93	
40.6	69	1825	14.2	93	35	1985	7.7	93	22	1985	5.0	93	12	1985	2.8	93	
45.2	62	1879	13.1	93	31	1985	6.9	93	20	1985	4.4	93	11	1985	2.5	93	
52.8	53	1930	11.5	93	26	1985	5.9	93	17	1985	3.8	93	9.5	1985	2.1	93	132 (B5)
56.7	49	1985	11.0	93	25	1985	5.5	93	16	1985	3.5	93	8.8	1985	2.0	93	
64.5	43	1985	9.7	93	22	1985	4.9	93	14	1985	3.1	93	7.8	1985	1.7	93	112 (B5)
73.6	38	1985	8.5	93	19	1985	4.3	93	12	1985	2.7	93	6.8	1985	1.5	93	
78.9	35	1985	7.9	93	18	1985	4.0	93	11	1985	2.5	93	6.3	1985	1.4	93	100 (B5)
91.9	30	1985	6.7	93	15	1985	3.4	93	9.7	1985	2.2	93	5.4	1985	1.2	93	
98.6	28	1985	6.3	93	14	1985	3.2	93	9.1	1985	2.0	93	5.1	1985	1.1	93	90 (B5)
117.8	24	1985	5.3	93	12	1985	2.7	93	7.6	1985	1.7	93	4.2	1985	0.95	93	
129.5	22	1985	4.8	93	11	1985	2.4	93	7.0	1985	1.6	93	3.9	1985	0.86	93	
147.2	19	1985	4.3	93	9.5	1985	2.1	93	6.1	1985	1.4	93	3.4	1985	0.76	93	
161.8	17	1985	3.9	93	8.7	1985	1.9	93	5.6	1985	1.2	93	3.1	1985	0.69	93	
177.1	16	1985	3.5	93	7.9	1985	1.8	93	5.1	1985	1.1	93	2.8	1985	0.63	93	

N.B. Per i riduttori evidenziati dal doppio bordo nella colonna delle potenze è necessario verificare lo scambio termico del riduttore (A-1.5). Per maggiori informazioni contattare il nostro uff. tecnico.

NOTE. Pay attention please to the frame around the input power value: for this gearboxes it's important to check the thermal capacity (A-1.5). For details please contact our technical office.

ПРИМЕЧАНИЕ. Обратите внимание на характеристики редукторов обведенных рамкой. Для этих редукторов необходимо провести проверку термической мощности (A-1.5). Для получения информации обращайтесь в наш технический отдел.

1.6 Prestazioni riduttori AR — *1.6 AR gearboxes performances* — 1.6 Характеристики редукторов AR

AR 120/2

155

ir	n_1 = 2800 min^{-1}				n_1 = 1400 min^{-1}				n_1 = 900 min^{-1}				n_1 = 500 min^{-1}				IEC
	n_2	T_{2M}	P	RD	n_2	T_{2M}	P	RD	n_2	T_{2M}	P	RD	n_2	T_{2M}	P	RD	
	min^{-1}	Nm	kW	%	min^{-1}	Nm	kW	%	min^{-1}	Nm	kW	%	min^{-1}	Nm	kW	%	
2.8	1005	1380	152	95	503	1700	94	95	323	1700	60	95	179	1700	34	95	
3.9	726	1380	110	95	363	1700	68	95	233	1700	44	95	130	1700	24	95	
5.2	537	1460	86	95	268	1800	53	95	172	1800	34	95	96	1800	19	95	
6.1	457	1620	81	95	229	2000	50	95	147	2280	37	95	82	2720	24	95	
7.7	366	1780	72	95	183	2200	44	95	118	2500	32	95	65	3000	22	95	
8.5	330	2030	74	95	165	2500	45	95	106	2850	33	95	59	3000	21	95	
10.6	264	2270	66	95	132	2280	41	95	85	3000	29	95	47	3000	17	95	225 (B5)
11.5	244	2430	65	95	122	3000	40	95	78	3000	28	95	44	3000	16	95	
14.1	199	2430	53	95	100	3000	33	95	64	3000	23	95	36	3000	13	95	200 (B5)
17.7	158	2430	42	95	79	3000	26	95	51	3000	18	95	28	3000	10	95	180 (B5)
19.3	145	2430	39	95	73	3000	24	95	47	3000	17	95	26	3000	9.4	95	
21.0	133	2430	36	95	67	3000	22	95	43	3000	16	95	24	3000	8.6	95	160 (B5)
22.1	127	2430	34	95	63	3000	21	95	41	3000	15	95	23	3000	8.2	95	132 (B5)
23.1	121	2430	32	95	61	3000	20	95	39	3000	14	95	22	3000	7.8	95	
24.0	116	2430	31	95	58	3000	19	95	37	3000	14	95	21	3000	7.5	95	
27.0	104	2430	28	95	52	3000	17	95	33	3000	12	95	19	3000	6.7	95	
28.9	97	2430	26	95	48	3000	16	95	31	3000	11	95	17	3000	6.3	95	
29.6	95	2430	25	95	47	3000	16	95	30	3000	11	95	17	3000	6.1	95	
33.7	83	2430	22	95	41	3000	14	95	27	3000	10	95	15	3000	5.4	95	
37.0	76	2430	20	95	38	3000	12	95	24	3000	8.8	95	14	3000	4.9	95	

AR 120/3

155

40.7	69	2550	20	93	34	3300	13	93	22	3300	8.2	93	12	3300	4.6	93	
45.7	61	2640	18	93	31	3300	11	93	20	3300	7.3	93	11	3300	4.1	93	
50.9	55	2700	17	93	28	3300	10	93	18	3300	6.6	93	10	3300	3.7	93	
57.1	49	2760	15	93	25	3300	9.1	93	16	3300	5.9	93	8.8	3300	3.3	93	
62.2	45	2840	14	93	23	3300	8.4	93	14	3300	5.4	93	8.0	3300	3.0	93	
72.6	39	2900	13	93	19	3300	7.2	93	12	3300	4.6	93	6.9	3300	2.6	93	
77.7	36	2960	12	93	18	3300	6.7	93	12	3300	4.3	93	6.4	3300	2.4	93	
82.2	34	3040	12	93	17	3300	6.3	93	11	3300	4.1	93	6.1	3300	2.3	93	132 (B5)
90.7	31	3100	11	93	15	3300	5.7	93	10	3300	3.7	93	5.5	3300	2.0	93	
102.6	27	3180	10	93	14	3300	5.1	93	8.8	3300	3.3	93	4.9	3300	1.8	93	112 (B5)
114.4	24	3250	9.0	93	12	3300	4.5	93	7.9	3300	2.9	93	4.4	3300	1.6	93	
124.9	22	3300	8.3	93	11	3300	4.2	93	7.2	3300	2.7	93	4.0	3300	1.5	93	100 (B5)
142.9	20	3300	7.3	93	10	3300	3.6	93	6.3	3300	2.3	93	3.5	3300	1.3	93	90 (B5)
156.0	18	3300	6.7	93	9.0	3300	3.3	93	5.8	3300	2.1	93	3.2	3300	1.2	93	
175.7	16	3300	5.9	93	8.0	3300	3.0	93	5.1	3300	1.9	93	2.8	3300	1.1	93	
182.0	15	3300	5.7	93	7.7	3300	2.9	93	4.9	3300	1.8	93	2.7	3300	1.0	93	
197.1	14	3300	5.3	93	7.1	3300	2.6	93	4.6	3300	1.7	93	2.5	3300	0.9	93	
205.0	14	3300	5.1	93	6.8	3300	2.5	93	4.4	3300	1.6	93	2.4	3300	0.9	93	
222.0	13	3300	4.7	93	6.3	3300	2.3	93	4.1	3300	1.5	93	2.3	3300	0.8	93	
256.0	11	3300	4.1	93	5.5	3300	2.0	93	3.5	3300	1.3	93	2.0	3300	0.7	93	
277.3	10	3300	3.8	93	5.0	3300	1.9	93	3.2	3300	1.2	93	1.8	3300	0.7	93	

N.B.
I pesi riportati sono indicativi e possono variare in funzione della versione del riduttore.

NOTE
Listed weights are for reference only and can vary according to the gearbox version.

ПРИМЕЧАНИЕ
Указанный вес соответствует только исполнению с цилиндрических входным валом

N.B. Per i riduttori evidenziati dal doppio bordo nella colonna delle potenze è necessario verificare lo scambio termico del riduttore (A-1.5). Per maggiori informazioni contattare il nostro uff. tecnico.

NOTE. Pay attention please to the frame around the input power value: for this gearboxes it's important to check the thermal capacity (A-1.5). For details please contact our technical office.

ПРИМЕЧАНИЕ. Обратите внимание на характеристики редукторов обведенных рамкой. Для этих редукторов необходимо провести проверку термической мощности (A-1.5). Для получения информации обращайтесь в наш технический отдел.

Nella tab. 2.7 sono riportate le grandezze motore accoppiabili (IEC) unitamente alle dimensioni albero/flangia motore standard.

In table 2.7 the possible shaft/flange dimensions IEC standard are listed.

В таблице 2.7 приведены все возможные комбинации вал/фланец по IEC стандарту

Tab. 2.7 Possibili accoppiamenti con motori IEC - *Possible couplings with IEC motors* - Возможные соединения с IEC мотором

	IEC	**ir** (Tutti / *All* / Все)
AM 25/2	56	**9/120** (B5) - **9/80** • (B14) 9/140 - 9/90
AM 25/3	63	**11/140** (B5) - **11/90** (B14) 11/120 - 11/80 •
AM 32/1	80[1]	**19/200** (B5) - **19/120** (B14) 19/160 - 19/140 - 19/105 •
	71	**14/160** (B5) - **14/105** (B14) 14/140 - 14/120 - 14/90 •
	63	**11/140** (B5) - **11/90** • (B14) 11/160 - 11/120 - 11/105
	56	**9/120** (B5) 9/160 - 9/140 - 9/90 •
AM 35/2	80	**19/200** (B5) - **19/120** (B14) 19/160 -19/140 - 19/105 • - 19/90 •
	71	**14/160** (B5) - **14/105** (B14) 14/140 - 14/120 - 14/90•
	63	**11/140** (B5) - **11/90•** (B14) 11/160 - 11/120 - 11/105
AM 35/3	63	**11/140** (B5) - **11/90** (B14) 11/120 - 11/80•
	56	**9/120** (B5) - **9/80•** (B14) 9/140 - 9/90
AM 40/1	100	**28/250** (B5) - **28/160** (B14)
	90	**24/200** (B5) - **24/140** (B14) 24/160 - 24/120
	80	**19/200** (B5) - **19/120** (B14) 19/160 - 19/140
	71	**14/160** (B5)
	63	**11/140** (B5)
AM 41/2	**90** (1)	**24/200** (B5) - **24/140** (B14) - 24/160 - 24/120 - 24/105•
	80	**19/200** (B5) - **19/120** (B14)- 19/160 - 19/140 - 19/105•
	71	**14/160** (B5) - **14/105•** (B14) - 14/200 - 14/140 - 14/120 - 14/90•
	63	**11/140** (B5) - **11/90•** (B14) - 11/200 - 11/160 - 11/120 - 11/105•
AM 41/3	71	**14/160** (B5) - **14/105** (B14) - 14/140 - 14/120 -14/90•
	63	**11/140** (B5) - **11/90•** (B14) - 11/160 - 11/120 -11/105
AM 45/2	**100** (1)	**28/250** (B5) - **28/160** (B14) 28/140
	90	**24/200** (B5) - **24/140** (B14) - 24/250 - 24/160 - 24/120
	80	**19/200** (B5) - **19/120** (B14)- 19/160 - 19/140 - 19/105•
	71	**14/160** (B5) - **14/105•** (B14)- 14/200 - 14/140 - 14/120
AM 45/3	80	**19/200** (B5) - **19/120** (B14) - 19/160 - 19/140 - 19/105• - 19/90•
	71	**14/160** (B5) - **14/105•** (B14) - 14/200 - 14/140 - 14/120 - 14/90•
AM 50/1 **AM 50/2**	112	**28/250** (B5) - **28/160** (B14)
	100	**28/250** (B5) - **28/160** (B14)
	90	**24/200** (B5) - **24/140** (B14) 24/160 - 24/120
	80	**19/200** (B5) - **19/120** (B14) 19/160 - 19/140
	71	**14/160** (B5) 14/200 - 14/140 - 14/120
	63	**11/140** (B5)
AM 50/3	90	**24/200** (B5) - **24/140** (B14) 24/160 - 24/120
	80	**19/200** (B5) - **19/120** (B14) 19/160 - 19/140
	71	**14/160** (B5)
	63	**11/140** (B5)

	IEC	**ir** (Tutti / *All* / Все)
AM 60/1 **AM 60/2**	132	**38/300** (B5) - **38/200** (B14) -38/250
	112	**28/250** (B5) - **28/160** (B14) -28/200 - 28/300
	100	**28/250** (B5) - **28/160** (B14) -28/200 - 28/300
	90	**24/200** (B5) - **24/140** (B14) -24/300 - 24/250 - 24/160 24/120
	80	**19/200** (B5) - **19/120** (B14) -19/160 - 19/140
	71	**14/160** (B5)
AM 60/3	100	**28/250** (B5) - **28/160** (B14)
	90	**24/200** (B5) - **24/140** (B14) -24/160 - 24/120
	80	**19/200** (B5) - **19/120** (B14) -19/160 - 19/140
	71	**14/160** (B5) -14/200 - 14/140 - 14/120
AM 80/1 **AM 80/2**	160	**42/350** (B5) - 42/300 - 42/250
	132	**38/300** (B5) - 38/350 - 38/250
	112	**28/250** (B5) - 28/350 - 28/300
	100	**28/250** (B5) - 28/350 - 28/300
	90	**24/200** (B5)
	80	**19/200** (B5)
AM 80/3	112	**28/250** (B5)
	100	**28/250** (B5)
	90	**24/200** (B5)
	80	**19/200** (B5)
AM 100/1 **AM 100/2**	200[2]	**55/400** (B5)
	180[2]	**48/350** (B5)
	160[2]	**42/350** (B5)
	132	**38/300** (B5) - **38/200** (B14) - 38/250
	112	**28/250** (B5) - 28/200 - 28/300
	100	**28/250** (B5) - 28/200 - 28/300
AM 100/3	132	**38/300** (B5) - 28/300
	112	**28/250** (B5) - 38/250
	100	**28/250** (B5) - 38/250
	90	**24/200** (B5)
AM 120/2	225[3]	**60/450** (B5)
	200[3]	**55/400** (B5) - 55/450
	180[3]	**48/350** (B5) - 48/450 - 48/400
	160[3]	**42/350** (B5) - 42/450 - 42/400
	132[3]	**38/300** (B5) - 38/450 - 38/400 - 38/350 - 38-250
AM 120/3	132	**38/300** (B5)
	112	**28/250** (B5)
	100	**28/250** (B5)
	90	**24/200** (B5)

(1) ATTENZIONE! / *WARNING!* / ВНИМАНИЕ!
(Vedere paragrafo 1.11-A) / (Look at chapter 1.11-A) / (Смотри параграф 1.1-A).

[1] Il PAM 80 B5 nel AM 32/1 è disponibile solo con corpo flangiato
[2] Da PAM 160 a PAM 200 forniti con giunto tipo Rotex (per prescrizione di montaggio vedere sezione A paragrafo "installazione")
[3] Da PAM 132 a PAM 225 forniti con giunto tipo Rotex (per prescrizione di montaggio vedere sezione A paragrafo "installazione").

Legenda:
11/140 (B5) 11/120
11/140 : combinazioni albero/flangia standard
(B5) : forma costruttiva motore IEC
11/120 : combinazioni albero/flangia a richiesta
N.B.
La configurazione standard della flangia attacco motore prevede 4 fori a 45° (esempio x: vedi par 2.3).
Per le flange contrassegnate con il simbolo (•) i fori per il fissaggio al motore sono disposti in croce (esempio +). Pertanto è opportuno valutare l'ingombro della morsettiera del motore che verrà installato in quanto essa verrà a trovarsi orientata a 45° rispetto agli assi. Per la scelta della posizione della morsettiera rispetto agli assi fare riferimento allo schema seguente (in cui la posizione 5 è quella standard):

[1] PAM 80 B5 on AM 32/1 only available in flanged configuration
[2] PAM 160 through PAM 200 come with Rotex coupling (for mounting directions, see section A, paragraph "Installation")
[3] PAM 132 through PAM 225 come with Rotex coupling (for mounting directions, see section A, paragraph "Installation")

Key:
***11/140** (B5) 11/120*
***11/140** : standard shaft/flange combination*
(B5) : IEC motor constructive shape
11/120 : shaft/flange combinations upon request
Note.
The standard configuration for the 4 holes is 45° to the axles (like an x: see par 2.3).

For the B14 flanges marked with (•) the holes to fit the motor are on the axles (like a +). Therefore we suggest to check the dimensions of the terminal board of the motor as it will be at 45° to the axles. Please choose the terminal board position refering to the following sketch (in which n° 5 is the standard position):

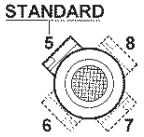

[1] PAM80B5 на редукторе AM 32/1 доступен только на фланцевом исполнении
[2] PAM160 до PAM200 соединение производится через муфту ROTEX (для монтажа обратитесь к параграфу A, раздел "Установка"
[3] PAM132 до PAM225 соединение производится через муфту ROTEX (для монтажа обратитесь к параграфу A, раздел "Установка"

Обозначения:
11/140 (B5) 11/120
11/140 : Стандартная комбинация вал/фланец
(B5) : Конструктивное исполнение IEC мотора
11/120 : Доступная комбинация вал/фланец
ПРИМЕЧАНИЕ.
Стандартное расположение - 4 отверстия, расположенных под углом 45°(см.пример в разделе 2.3).
Для фланцев B14, отмеченных (•) посадочные отверстия двигателя находятся под углом 45°. Поэтому необходимо проверить расположение клеммной коробки (в этом случае 5 - стандартное положение):

1.7 Prestazioni motoriduttori

1.7 Gearmotors performances

1.7 Характеристики мотор-редуктора

0.09 kW

n_1= 2740 min^{-1} 56A 2
n_1= 1360 min^{-1} 56B 4
n_1= 860 min^{-1} 63B 6

n_2 min^{-1}	ir	T2 Nm	FS'	AM AC	
806	3.4	1.0	11.8	**25/2**	56A 2
703	3.9	1.2	10.5	**25/2**	56A 2
571	4.8	1.4	8.5	**25/2**	56A 2
453	3.0	1.8	13.6	**32/1**	56B 4
400	3.4	2.0	5.9	**25/2**	56B 4
349	3.9	2.3	5.2	**25/2**	56B 4
302	4.5	2.8	9.6	**32/1**	56B 4
283	4.8	2.9	4.2	**25/2**	56B 4
257	5.3	3.2	8.2	**32/1**	56B 4
243	5.6	3.4	3.6	**25/2**	56B 4
209	6.5	4.0	5.2	**32/1**	56B 4
189	7.2	4.3	2.8	**25/2**	56B 4
156	8.7	5.2	2.3	**25/2**	56B 4
151	9.0	5.4	2.6	**25/2**	56B 4
130	10.5	6.3	2.2	**25/2**	56B 4
101	13.4	8.0	1.9	**25/2**	56B 4
84	16.2	10	1.5	**25/2**	56B 4
76	17.9	11	1.4	**25/2**	56B 4
72	18.9	11	1.7	**25/3**	56B 4
58	23.4	14	1.4	**25/3**	56B 4
50	27.2	16	1.3	**25/3**	56B 4
47	18.1	17.2	3.2	**35/2**	63B 6
46	59.1	17.6	3.1	**35/3**	56A 2
43	31.9	19	0.9	**25/3**	56B 4
40	21.3	20.3	3.0	**35/2**	63B 6
40	68.1	20.3	2.7	**35/3**	56A 2
39	35.3	21	0.8	**25/3**	56B 4
33	41.8	25	0.9	**25/3**	56B 4
31	43.9	25.8	2.3	**35/3**	56B 4
27	50.6	29.7	2.0	**35/3**	56B 4
23	37.2	35.3	3.2	**41/2**	63B 6
23	59.1	34.7	1.7	**35/3**	56B 4
20	68.1	40.1	1.5	**35/3**	56B 4
17.3	49.6	47.1	2.4	**41/2**	63B 6
17.3	78.6	46.2	1.3	**35/3**	56B 4
15.8	54.4	50.6	2.4	**41/3**	63B 6
14.7	92.4	54.3	1.1	**35/3**	56B 4
14.0	61.3	57.0	2.1	**41/3**	63B 6
12.5	109.1	64.1	0.9	**35/3**	56B 4
12.1	70.8	65.8	1.8	**41/3**	63B 6
10.9	124.3	73.1	0.8	**35/3**	56B 4
10.4	82.5	76.7	1.6	**41/3**	63B 6
9.6	89.3	83	2.6	**50/3**	63B 6
9.5	91.0	84.6	1.4	**41/3**	63B 6
8.0	107.4	99.8	1.2	**41/3**	63B 6
7.3	117.6	109	2.0	**50/3**	63B 6
7.3	118.4	110.0	1.1	**41/3**	63B 6
6.7	127.5	119	1.8	**50/3**	63B 6
6.7	128.6	119.5	1.0	**41/3**	63B 6
6.1	140.0	130.1	0.9	**41/3**	63B 6
5.9	146.9	137	1.5	**50/3**	63B 6

0.11 kW

n_1= 1360 min^{-1} 56C 4

n_2 min^{-1}	ir	T2 Nm	FS'	AM AC	
756	1.8	1.3	16.1	**32/1**	56C 4
648	2.1	1.6	14.4	**32/1**	56C 4
544	2.5	1.9	12.7	**32/1**	56C 4
400	3.4	2.5	4.8	**25/2**	56C 4
349	3.9	2.9	4.3	**25/2**	56C 4
283	4.8	3.5	3.5	**25/2**	56C 4
243	5.6	4.1	3.0	**25/2**	56C 4
189	7.2	5.3	2.3	**25/2**	56C 4
156	8.7	6.4	1.9	**25/2**	56C 4
151	9.0	6.6	2.1	**25/2**	56C 4
130	10.5	7.7	1.8	**25/2**	56C 4
101	13.4	10	1.5	**25/2**	56C 4
84	16.2	12	1.3	**25/2**	56C 4
76	17.9	13	1.1	**25/2**	56C 4
72	18.9	14	1.4	**25/3**	56C 4
58	23.4	17	1.1	**25/3**	56C 4
50	27.2	20	1.0	**25/3**	56C 4
31.0	43.9	32	1,9	**35/3**	56C 4
26.9	50.6	36	1.7	**35/3**	56C 4
23.0	59.1	42	1.4	**35/3**	56C 4
20.0	68.1	49	1.2	**35/3**	56C 4
17.3	78.6	56	1.1	**35/3**	56C 4
14.7	92.4	66	0.9	**35/3**	56C 4
12.5	109.1	78	0.8	**35/3**	56C 4
10.9	124.3	89	0.7	**35/3**	56C 4

0.13 kW

n_1= 2750 min^{-1} 56B 2
n_1= 1360 min^{-1} 63A 4
n_1= 860 min^{-1} 63C 6

n_2 min^{-1}	ir	T2 Nm	FS'	AM AC	
1100	2.5	1.1	14.7	**32/1**	56B 2
917	3.0	1.3	13.2	**32/1**	56B 2
809	3.4	1.5	11.8	**32/1**	56B 2
809	3.4	1.5	8.2	**25/2**	56B 2
756	1.8	1.6	13.6	**32/1**	63A 4
705	3.9	1.7	7.3	**25/2**	56B 2
648	2.1	1.9	12.2	**32/1**	63A 4
573	4.8	2.1	5.9	**25/2**	56B 2
544	2.5	2.2	10.7	**32/1**	63A 4
491	5.6	2.4	5.1	**25/2**	56B 2
453	3.0	2.7	9.4	**32/1**	63A 4
425	3.2	2.8	17.6	**40/1**	63A 4
400	3.4	2.9	4.1	**25/2**	63A 4
349	3.9	3.5	7.5	**32/1**	63A 4
349	3.9	3.4	3.6	**25/2**	63A 4
338	4.0	3.5	10.9	**35/2**	63A 4
316	8.7	3.7	3.3	**25/2**	56B 2
302	4.5	4.0	6.7	**32/1**	63A 4
283	4.8	4.2	2.9	**25/2**	63A 4
262	10.5	4.5	2.9	**25/2**	56B 2

0.13 kW

n_1= 2750 min^{-1} 56B 2
n_1= 1360 min^{-1} 63A 4
n_1= 860 min^{-1} 63C 6

n_2 min^{-1}	ir	T2 Nm	FS'	AM AC	
257	5.3	4.7	5.7	**32/1**	63A 4
243	5.6	4.9	2.5	**25/2**	63A 4
221	3.9	5.3	2.4	**25/2**	63C 6
205	13.4	5.7	2.3	**25/2**	56B 2
189	7.2	6.2	2.0	**25/2**	63A 4
170	16.2	6.9	1.9	**25/2**	56B 2
156	8.7	7.5	1.6	**25/2**	63A 4
151	9.0	7.8	1.8	**25/2**	63A 4
132	6.5	9.1	2.5	**32/1**	63C 6
130	10.5	9.1	1.5	**25/2**	63A 4
119	7.2	9.9	1.3	**25/2**	63C 6
101	13.4	12	1.3	**25/2**	63A 4
86	15.7	14	4.0	**35/2**	63A 4
84	16.2	14	1.1	**25/2**	63A 4
76	17.9	16	1.0	**25/2**	63A 4
75	18.1	16	3.5	**35/2**	63A 4
58	23.4	20	1.0	**25/3**	63A 4
54	25.2	22	2.6	**35/2**	63A 4
50	27.2	23	0.9	**25/3**	63A 4
47	28.7	25	2.4	**35/2**	63A 4
41	33.4	29	1.7	**35/2**	63A 4
36	38.0	33	1.5	**35/2**	63A 4
30	45.1	39	1.3	**35/2**	63A 4
27	49.6	43.0	2.4	**41/2**	63A 4
27	50.6	44	1.4	**35/3**	63A 4
25	54.4	46.2	2.4	**41/3**	63A 4
23	59.1	51	1.2	**35/3**	63A 4
22	61.3	52.0	2.1	**41/3**	63A 4
20	68.1	59	1.0	**35/3**	63A 4
19.2	70.8	60.1	1.8	**41/3**	63A 4
17.5	77.5	66	3.3	**50/3**	63A 4
17.3	78.6	68	0.9	**35/3**	63A 4
15.2	89.3	76	2.8	**50/3**	63A 4
14.9	91.0	77.3	1.4	**41/3**	63A 4
14.7	92.4	80	0.7	**35/3**	63A 4
14.0	61.3	82.3	1.5	**41/3**	63C 6
13.3	102.1	87	2.4	**50/3**	63A 4
12.7	107.4	91.2	1.2	**41/3**	63A 4
11.6	117.6	100	2.2	**50/3**	63A 4
11.5	118.4	100.5	1.1	**41/3**	63A 4
10.7	127.5	108	2.0	**50/3**	63A 4
10.6	128.6	109.2	1.0	**41/3**	63A 4
9.7	140.0	118.9	0.9	**41/3**	63A 4
9.3	146.9	125	1.7	**50/3**	63A 4
8.4	102.1	137	1.5	**50/3**	63C 6
8.0	107.4	144.2	0.8	**41/3**	63C 6
7.3	117.6	158	1.4	**50/3**	63C 6
6.7	127.5	171	1.3	**50/3**	63C 6
5.9	146.9	197	1.1	**50/3**	63C 6

1.7 Prestazioni motoriduttori

1.7 Gearmotors performances

1.7 Характеристики мотор-редуктора

0.18 kW

n_1= 2760 min^{-1} 63A 2
n_1= 1370 min^{-1} 63B 4
n_1= 870 min^{-1} 71A 6

n_2 min^{-1}	ir	T2 Nm	FS'	AM AC	
1533	1.8	1.1	13.3	**32/1**	63A 2
1314	2.1	1.3	11.7	**32/1**	63A 2
1104	2.5	1.5	10.7	**32/1**	63A 2
920	3.0	1.8	9.6	**32/1**	63A 2
913	1.5	1.8	19.2	**40/1**	63B 4
812	3.4	2.1	8.6	**32/1**	63A 2
761	1.8	2.2	9.9	**32/1**	63B 4
708	3.9	2.4	7.6	**32/1**	63A 2
708	3.9	2.3	5.3	**25/2**	63A 2
652	2.1	2.6	8.8	**32/1**	63B 4
613	4.5	2.7	6.5	**32/1**	63A 2
575	4.8	2.8	4.3	**25/2**	63A 2
548	2.5	3.0	7.8	**32/1**	63B 4
493	5.6	3.3	3.7	**25/2**	63A 2
483	1.8	3.4	6.3	**32/1**	71A 6
457	3.0	3.7	6.8	**32/1**	63B 4
425	6.5	3.9	4.3	**32/1**	63A 2
403	3.4	4.1	3.0	**25/2**	63B 4
383	7.2	4.3	2.9	**25/2**	63A 2
351	3.9	4.7	5.4	**32/1**	63B 4
351	3.9	4.6	2.6	**25/2**	63B 4
317	8.7	5.1	2.4	**25/2**	63A 2
307	9.0	5.3	2.3	**25/2**	63A 2
285	4.8	5.7	2.1	**25/2**	63B 4
263	10.5	6.2	2.1	**25/2**	63A 2
245	5.6	6.7	1.8	**25/2**	63B 4
211	6.5	7.9	2.6	**32/1**	63B 4
190	7.2	8.6	1.4	**25/2**	63B 4
187	7.3	8.8	5.1	**25/2**	63B 4
170	16.2	10	1.4	**25/2**	63A 2
164	5.3	10	2.6	**32/1**	71A 6
157	8.7	10	1.2	**25/2**	63B 4
153	5.7	11	3.8	**40/1**	71A 6
152	9.0	11	1.3	**25/2**	63B 4
146	18.9	11	1.4	**25/3**	63A 2
135	10.1	12	4.1	**25/2**	63B 4
134	6.5	12	1.8	**32/1**	71A 6
130	10.5	13	1.1	**25/2**	63B 4
124	7.0	13	2.9	**40/1**	71A 6
118	23.4	14	1.1	**25/3**	63A 2
117	11.7	14	3.6	**35/2**	63B 4
102	13.4	16	0.9	**25/2**	63B 4
101	13.6	16	3.1	**35/2**	63B 4
87	15.7	19	2.9	**35/2**	63B 4
75	18.1	22	2.5	**35/2**	63B 4
64	21.3	25	2.2	**35/2**	63B 4
54	25.2	30	1.9	**35/2**	63B 4
48	28.7	34	1.8	**35/2**	63B 4
48	28.6	34.1	3.1	**41/2**	63B 4
43	20.2	37.9	3.0	**41/2**	71A 6
41	33.4	40	1.3	**35/2**	63B 4
37	37.2	44.3	2.4	**41/2**	63B 4
36	38.0	45	1.1	**35/2**	63B 4
31	43.9	52	1.1	**35/3**	63B 4

0.18 kW

n_1= 2760 min^{-1} 63A 2
n_1= 1370 min^{-1} 63B 4
n_1= 870 min^{-1} 71A 6

n_2 min^{-1}	ir	T2 Nm	FS'	AM AC	
30	28.6	53.7	2.1	**41/2**	71A 6
30	45.1	54	0.9	**35/2**	63B 4
29	30.2	56.7	3.1	**45/2**	71A 6
28	49.6	59.1	1.8	**41/2**	63B 4
27	50.6	60	1.0	**35/3**	63B 4
25	54.4	63.5	1.7	**41/3**	63B 4
25	54.3	63	3.4	**50/3**	63B 4
23	59.1	70	0.9	**35/3**	63B 4
22	61.3	71.5	1.5	**41/3**	63B 4
21	65.9	77	2.7	**50/3**	63B 4
19.5	44.6	82.0	2.4	**45/3**	71A 6
19.4	70.8	82.6	1.3	**41/3**	63B 4
19.2	71.5	83	2.6	**50/3**	63B 4
19.0	45.9	86.2	2.1	**45/2**	71A 6
17.7	77.5	90	2.4	**50/3**	63B 4
17.5	49.6	93.1	1.2	**41/2**	71A 6
16.9	51.6	94.8	2.3	**45/3**	71A 6
16.6	82.5	96.3	1.1	**41/3**	63B 4
15.3	89.3	104	2.1	**50/3**	63B 4
15.1	91.0	106.2	1.0	**41/3**	63B 4
14.4	60.6	111.4	2.0	**45/3**	71A 6
13.4	102.1	119	1.7	**50/3**	63B 4
12.8	107.4	125.3	0.9	**41/3**	63B 4
12.0	72.4	133.0	1.5	**45/3**	71A 6
12.0	72.7	134	3.4	**60/3**	71A 6
11.6	117.6	137	1.6	**50/3**	63B 4
11.6	118.4	138.2	0.8	**41/3**	63B 4
11.1	78.6	144	3.2	**60/3**	71A 6
10.9	79.8	146.6	1.5	**45/3**	71A 6
10.7	127.5	149	1.5	**50/3**	63B 4
9.6	90.4	166	2.8	**60/3**	71A 6
9.5	92.0	169.1	1.3	**45/3**	71A 6
9.3	146.9	171	1.2	**50/3**	63B 4
8.7	100.2	184	2.3	**60/3**	71A 6
8.5	102.1	188	1.1	**50/3**	71A 6
7.7	113.7	208.9	0.9	**45/3**	71A 6
7.4	117.6	216	1.0	**50/3**	71A 6
6.8	128.8	237	1.9	**60/3**	71A 6
6.8	127.5	234	0.9	**50/3**	71A 6
6.7	129.1	237.2	0.8	**45/3**	71A 6
6.1	143.0	263	1.6	**60/3**	71A 6
5.3	164.1	302	1.4	**60/3**	71A 6

0.22 kW

n_1= 1400 min^{-1} 63C 4

n_2 min^{-1}	ir	T2 Nm	FS'	AM AC	
1167	1.2	1.7	17.2	**40/1**	63C 4
933	1.5	2.2	16.0	**40/1**	63C 4
824	1.7	2.5	16.2	**40/1**	63C 4
778	1.8	2.6	8.3	**32/1**	63C 4
667	2.1	3.1	7.4	**32/1**	63C 4
560	2.5	3.6	6.5	**32/1**	63C 4

0.22 kW

n_1= 1400 min^{-1} 63C 4

n_2 min^{-1}	ir	T2 Nm	FS'	AM AC	
467	3.0	4.4	5.7	**32/1**	63C 4
412	3.4	4.9	5.2	**32/1**	63C 4
412	3.4	4.8	2.5	**25/2**	63C 4
359	3.9	5.7	4.5	**32/1**	63C 4
359	3.9	5.6	2.2	**25/2**	63C 4
311	4.5	6.6	4.0	**32/1**	63C 4
292	4.8	6.8	1.8	**25/2**	63C 4
264	5.3	7.7	3.5	**32/1**	63C 4
250	5.6	8.0	1.5	**25/2**	63C 4
215	6.5	9.5	2.2	**32/1**	63C 4
194	7.2	10	1.2	**25/2**	63C 4
161	8.7	12	1.0	**25/2**	63C 4
156	9.0	13	1.1	**25/2**	63C 4
138	10.1	14.4	3.5	**25/2**	63C 4
133	10.5	15	0.9	**25/2**	63C 4
120	11.7	16.6	3.0	**35/2**	63C 4
103	13.6	19.4	2.6	**35/2**	63C 4
89	15.7	22.4	2.5	**35/2**	63C 4
77	18.1	25.9	2.1	**35/2**	63C 4
69	20.2	28.8	3.6	**41/2**	63C 4
66	21.3	30.4	1.8	**35/2**	63C 4
59	23.9	34.1	3.1	**41/2**	63C 4
56	25.2	35.9	1.6	**35/2**	63C 4
49	28.7	40.9	1.5	**35/2**	63C 4
49	28.6	40.8	2.6	**41/2**	63C 4
42	33.4	47.6	1.1	**35/2**	63C 4
38	37.2	53.0	2.0	**41/2**	63C 4
37	38.0	54.2	0.9	**35/2**	63C 4
31	45.1	64.4	0.8	**35/2**	63C 4
30	46.2	64	3.3	**50/3**	63C 4
29	48.9	68	0.9	**35/3**	63C 4
28	49.6	70.7	1.5	**41/2**	63C 4
28	50.8	71	3.0	**50/3**	63C 4
26	54.3	76	2.9	**50/3**	63C 4
26	54.4	75.9	1.4	**41/3**	63C 4
23	61.3	85.6	1.3	**41/3**	63C 4
21	65.9	92	2.3	**50/3**	63C 4
19.8	70.8	98.8	1.1	**41/3**	63C 4
19.6	71.5	100	2.2	**50/3**	63C 4
18.1	77.5	108	2.0	**50/3**	63C 4
17.0	82.5	115.1	1.0	**41/3**	63C 4
15.7	89.3	125	1.7	**50/3**	63C 4
15.4	91.0	127.0	0.9	**41/3**	63C 4
13.7	102.1	142	1.5	**50/3**	63C 4
11.9	117.6	164	1.3	**50/3**	63C 4
11.0	127.5	178	1.2	**50/3**	63C 4
9.5	146.9	205	1.0	**50/3**	63C 4

1.7 Prestazioni motoriduttori

1.7 Gearmotors performances

1.7 Характеристики мотор-редуктора

0.25 kW

n_1= 2790 min^{-1} — 63B 2
n_1= 1370 min^{-1} — 71A 4
n_1= 870 min^{-1} — 71B 6

n_2 min^{-1}	ir	T2 Nm	FS'	AM AC	
1550	1.8	1.5	9.7	**32/1**	63B 2
1329	2.1	1.7	8.5	**32/1**	63B 2
1116	2.5	2.1	7.8	**32/1**	63B 2
930	3.0	2.5	7.0	**32/1**	63B 2
821	3.4	2.8	6.2	**32/1**	63B 2
821	3.4	2.8	4.3	**25/2**	63B 2
761	1.8	3.0	7.1	**32/1**	71A 4
715	3.9	3.2	3.8	**25/2**	63B 2
652	2.1	3.5	6.4	**32/1**	71A 4
620	4.5	3.7	4.8	**32/1**	63B 2
581	4.8	3.9	3.1	**25/2**	63B 2
548	2.5	4.2	5.6	**32/1**	71A 4
457	3.0	5.1	4.9	**32/1**	71A 4
429	6.5	5.4	3.1	**32/1**	63B 2
388	7.2	5.9	2.1	**25/2**	63B 2
351	3.9	6.6	3.9	**32/1**	71A 4
348	2.5	6.7	3.6	**32/1**	71B 6
304	4.5	7.6	3.5	**32/1**	71A 4
266	10.5	8.5	1.5	**25/2**	63B 2
258	5.3	9.0	3.0	**32/1**	71A 4
211	6.5	11	1.9	**32/1**	71A 4
196	7.0	12	3.2	**40/1**	71A 4
187	7.3	12	3.7	**35/2**	71A 4
172	16.2	13	1.0	**25/2**	63B 2
158	8.7	14	3.5	**35/2**	71A 4
156	17.9	15	1.0	**25/2**	63B 2
148	18.9	15	1.0	**25/3**	63B 2
135	10.1	17	3.0	**35/2**	71A 4
117	11.7	19	2.6	**35/2**	71A 4
101	13.6	23	2.2	**35/2**	71A 4
87	15.7	26	2.1	**35/2**	71A 4
75	18.1	30	1.8	**35/2**	71A 4
75	18.3	30.3	3.5	**41/2**	71A 4
68	20.2	33.4	3.1	**41/2**	71A 4
64	21.3	35	1.6	**35/2**	71A 4
57	23.9	39.6	2.7	**41/2**	71A 4
54	25.2	42	1.4	**35/2**	71A 4
52	26.6	44.0	3.6	**45/2**	71A 4
51	27.0	44	1.4	**35/3**	71A 4
48	28.7	47	1.3	**35/2**	71A 4
48	28.6	47.3	2.2	**41/2**	71A 4
45	30.2	50.0	3.2	**45/2**	71A 4
41	33.4	55	0.9	**35/2**	71A 4
40	21.5	56.1	3.5	**45/2**	71B 6
37	37.2	61.6	1.7	**41/2**	71A 4
37	37.3	61.8	2.8	**45/2**	71A 4
36	38.0	63	0.8	**35/2**	71A 4
34	40.5	66	3.2	**50/3**	71A 4
33	41.4	67.1	3.0	**45/3**	71A 4
31	44.6	72.3	2.5	**45/3**	71A 4
30	46.2	75	2.9	**50/3**	71A 4
30	45.9	76.0	2.2	**45/2**	71A 4
28	49.6	82.1	1.3	**41/2**	71A 4
27	50.8	82	2.6	**50/3**	71A 4

0.25 kW

n_1= 2790 min^{-1} — 63B 2
n_1= 1370 min^{-1} — 71A 4
n_1= 870 min^{-1} — 71B 6

n_2 min^{-1}	ir	T2 Nm	FS'	AM AC	
27	51.6	83.6	2.4	**45/3**	71A 4
25	54.4	88.2	1.2	**41/3**	71A 4
25	54.3	88	2.5	**50/3**	71A 4
23	60.6	98.2	2.0	**45/3**	71A 4
22	61.3	99.3	1.1	**41/3**	71A 4
21	41.4	105.7	2.1	**45/3**	71B 6
21	65.9	107	1.9	**50/3**	71A 4
19.4	70.8	114.7	1.0	**41/3**	71A 4
19.2	71.5	116	1.9	**50/3**	71A 4
18.9	72.4	117.3	1.5	**45/3**	71A 4
17.7	77.5	126	1.7	**50/3**	71A 4
17.2	79.8	129.3	1.5	**45/3**	71A 4
16.6	82.5	133.7	0.8	**41/3**	71A 4
15.3	89.3	145	1.5	**50/3**	71A 4
15.2	90.4	147	3.1	**60/3**	71A 4
14.9	92.0	149.1	1.3	**45/3**	71A 4
13.7	100.2	162	2.6	**60/3**	71A 4
13.4	102.1	165	1.3	**50/3**	71A 4
12.2	112.2	182	2.5	**60/3**	71A 4
12.0	113.7	184.3	1.0	**45/3**	71A 4
11.6	117.6	191	1.1	**50/3**	71A 4
10.7	127.5	207	1.0	**50/3**	71A 4
10.6	129.1	209.2	0.9	**45/3**	71A 4
10.6	128.8	209	2.2	**60/3**	71A 4
9.6	143.0	232	1.8	**60/3**	71A 4
9.5	92.0	234.8	0.9	45/3	71B 6
9.3	146.9	238	0.9	50/3	71A 4
8.3	164.1	266	1.6	60/3	71A 4
6.8	128.8	329	1.4	60/3	71B 6
5.3	164.1	419	1.0	60/3	71B 6

0.37 kW

n_1= 2790 min^{-1} — 63C 2
n_1= 1380 min^{-1} — 71B 4
n_1= 910 min^{-1} — 80A 6
n_1= 880 min^{-1} — 71C 6

n_2 min^{-1}	ir	T2 Nm	FS'	AM AC	
1860	1.5	1.8	19.0	**40/1**	63C 2
1641	1.7	2.1	19.2	**40/1**	63C 2
1550	1.8	2.2	6.6	**32/1**	63C 2
1329	2.1	2.6	5.8	**32/1**	63C 2
1116	2.5	3.1	5.2	**32/1**	63C 2
930	3.0	3.7	4.7	**32/1**	63C 2
821	3.4	4.2	4.2	**32/1**	63C 2
821	3.4	4.1	2.9	**25/2**	63C 2
767	1.8	4.5	4.9	**32/1**	71B 4
715	3.9	4.8	3.7	**32/1**	63C 2
715	3.9	4.7	2.6	**25/2**	63C 2
657	2.1	5.2	4.3	**32/1**	71B 4
620	4.5	5.5	3.2	**32/1**	63C 2
581	4.8	5.8	2.1	**25/2**	63C 2
552	2.5	6.2	3.8	**32/1**	71B 4
526	5.3	6.5	2.9	**32/1**	63C 2
498	5.6	6.7	1.8	**25/2**	63C 2
460	3.0	7.5	3.4	**32/1**	71B 4

0.37 kW

n_1= 2790 min^{-1} — 63C 2
n_1= 1380 min^{-1} — 71B 4
n_1= 910 min^{-1} — 80A 6
n_1= 880 min^{-1} — 71C 6

n_2 min^{-1}	ir	T2 Nm	FS'	AM AC	
419	2.1	8.2	2.8	**32/1**	71C 6
406	3.4	8.4	3.1	**32/1**	71B 4
388	7.2	8.7	1.4	**25/2**	63C 2
354	3.9	9.7	2.7	**32/1**	71B 4
343	4.0	10	3.9	**35/2**	71B 4
321	8.7	10	1.2	**25/2**	63C 2
310	9.0	11	1.1	**25/2**	63C 2
307	4.5	11	2.4	**32/1**	71B 4
294	4.7	11	3.5	**35/2**	71B 4
260	5.3	13	2.0	**32/1**	71B 4
259	3.4	13	2.0	**32/1**	71C 6
255	5.4	13	3.0	**35/2**	71B 4
242	5.7	14	2.8	**40/1**	71B 4
218	6.3	15	2.6	**35/2**	71B 4
212	6.5	16	1.3	**32/1**	71B 4
197	7.0	17	2.2	**40/1**	71B 4
188	7.3	18	2.5	**35/2**	71B 4
159	8.7	21	2.4	**35/2**	71B 4
136	10.1	25	2.0	**35/2**	71B 4
131	10.5	25.5	3.5	**41/2**	71B 4
118	11.7	28	1.8	**35/2**	71B 4
114	12.1	29.4	3.2	**41/2**	71B 4
106	13.0	31.6	3.2	**41/2**	71B 4
101	13.6	33	1.5	**35/2**	71B 4
90	15.3	37.2	2.8	**41/2**	71B 4
88	15.7	38	1.4	**35/2**	71B 4
82	16.9	41.1	3.9	**45/2**	71B 4
76	18.1	44	1.2	**35/2**	71B 4
75	18.3	44.5	2.4	**41/2**	71B 4
74	18.7	45.5	3.8	**45/2**	71B 4
68	20.2	49.1	2.1	**41/2**	71B 4
65	21.3	52	1.1	**35/2**	71B 4
64	21.5	52.3	3.4	**45/2**	71B 4
58	23.8	58	3.5	**50/2**	71B 4
58	23.9	58.1	1.8	**41/2**	71B 4
55	25.2	61	0.9	**35/2**	71B 4
53	25.9	63	3.2	**50/2**	71B 4
52	26.6	64.7	2.5	**45/2**	71B 4
48	28.6	69.6	1.5	**41/2**	71B 4
48	28.5	68	3.2	**50/3**	71B 4
48	28.7	70	0.9	**35/2**	71B 4
46	29.8	72	2.8	**50/2**	71B 4
46	30.2	73.5	2.2	**45/2**	71B 4
43	32.4	77	2.8	**50/3**	71B 4
39	35.6	85	2.5	**50/3**	71B 4
37	37.2	90.5	1.2	**41/2**	71B 4
37	37.3	90.7	1.9	**45/2**	71B 4
34	40.5	96	2.2	**50/3**	71B 4
33	41.4	98.6	2.0	**45/3**	71B 4
31	44.6	106.2	1.7	**45/3**	71B 4
30	45.9	111.7	1.5	**45/2**	71B 4
30	46.2	110	2.0	**50/3**	71B 4
28	49.6	120.7	0.9	**41/2**	71B 4
27	50.8	121	1.8	**50/3**	71B 4

1.7 Prestazioni motoriduttori

1.7 Gearmotors performances

1.7 Характеристики мотор-редуктора

0.37 kW

n_1= 2790 min^{-1} — 63C 2
n_1= 1380 min^{-1} — 71B 4
n_1= 910 min^{-1} — 80A 6
n_1= 880 min^{-1} — 71C 6

n_2 min^{-1}	ir	T2 Nm	FS'	AM AC
27	51.6	122.9	1.6	**45/3**	71B 4
25	54.4	129.5	0.8	**41/3**	71B 4
25	55.2	131	3.5	**60/3**	71B 4
25	54.3	129	1.7	**50/3**	71B 4
23	60.3	144	2.9	**60/3**	71B 4
23	60.6	144.3	1.4	**45/3**	71B 4
21	65.9	157	1.3	**50/3**	71B 4
19.3	71.5	170	1.3	**50/3**	71B 4
19.1	72.4	172.4	1.0	**45/3**	71B 4
19.0	72.7	173	2.7	**60/3**	71B 4
17.8	77.5	185	1.2	**50/3**	71B 4
17.6	78.6	187	2.5	**60/3**	71B 4
17.3	79.8	190.0	1.1	**45/3**	71B 4
15.5	89.3	213	1.0	**50/3**	71B 4
15.3	90.4	215	2.1	**60/3**	71B 4
15.0	92.0	219.1	0.9	**45/3**	71B 4
13.8	100.2	239	1.8	**60/3**	71B 4
13.5	102.1	243	0.9	**50/3**	71B 4
12.3	112.2	267	1.7	**60/3**	71B 4
12.3	71.5	267	0.8	**50/3**	71C 6
10.7	128.8	307	1.5	**60/3**	71B 4
10.1	90.0	325	3.0	**80/3**	80A 6
9.7	143.0	341	1.2	**60/3**	71B 4
8.7	104.8	378	2.6	**80/3**	80A 6
8.4	164.1	391	1.1	**60/3**	71B 4
7.8	117.2	423	2.3	**80/3**	80A 6
7.8	112.2	419	1.1	**60/3**	71C 6
6.8	134.3	485	2.0	**80/3**	80A 6
6.8	128.8	481	1.0	**60/3**	71C 6
6.1	149.3	539	1.8	**80/3**	80A 6
5.3	171.2	618	1.6	**80/3**	80A 6

0.55 kW

n_1= 2800 min^{-1} — 71B 2
n_1= 1380 min^{-1} — 71C 4
n_1= 1390 min^{-1} — 80A 4
n_1= 910 min^{-1} — 80B 6

n_2 min^{-1}	ir	T2 Nm	FS'	AM AC
2333	1.2	2.2	13.7	**40/1**	71B 2
1867	1.5	2.7	12.8	**40/1**	71B 2
1647	1.7	3.1	12.9	**40/1**	71B 2
1556	1.8	3.3	4.4	**32/1**	71B 2
1333	2.1	3.8	3.9	**32/1**	71B 2
1150	1.2	4.4	6.8	**40/1**	71C 4
1120	2.5	4.5	3.5	**32/1**	71B 2
933	3.0	5.5	3.2	**32/1**	71B 2
920	1.5	5.5	6.3	**40/1**	71C 4
812	1.7	6.3	6.4	**40/1**	71C 4
767	1.8	6.6	3.3	**32/1**	71C 4
718	3.9	7.1	2.5	**32/1**	71B 2
657	2.1	7.8	2.9	**32/1**	71C 4
622	4.5	8.2	2.2	**32/1**	71B 2
552	2.5	9.2	2.6	**32/1**	71C 4
528	5.3	10	2.0	**32/1**	71B 2

0.55 kW

n_1= 2800 min^{-1} — 71B 2
n_1= 1380 min^{-1} — 71C 4
n_1= 1390 min^{-1} — 80A 4
n_1= 910 min^{-1} — 80B 6

n_2 min^{-1}	ir	T2 Nm	FS'	AM AC
460	3.0	11	2.3	**32/1**	71C 4
443	6.3	11	3.2	**35/2**	71B 2
406	3.4	13	2.1	**32/1**	71C 4
405	3.4	12	2.8	**35/2**	71C 4
354	3.9	14	1.8	**32/1**	71C 4
343	4.0	15	2.6	**35/2**	71C 4
307	4.5	17	1.6	**32/1**	71C 4
294	4.7	17	2.4	**35/2**	71C 4
282	4.9	18	2.5	**40/1**	71C 4
260	5.3	20	1.4	**32/1**	71C 4
255	5.4	20	2.0	**35/2**	71C 4
242	5.7	21	1.9	**40/1**	71C 4
238	5.8	21	3.0	**50/1**	71C 4
218	6.3	23	1.7	**35/2**	71C 4
212	6.5	24	0.9	**32/1**	71C 4
209	6.6	24	2.5	**50/1**	71C 4
197	7.0	26	1.5	**40/1**	71C 4
188	7.3	27	1.7	**35/2**	71C 4
185	7.5	26.9	3.0	**41/2**	80A 4
184	7.5	27.1	2.9	**41/2**	71C 4
164	8.5	30.5	2.8	**41/2**	80A 4
162	8.5	30.7	2.8	**41/2**	71C 4
159	8.7	31	1.6	**35/2**	71C 4
136	10.1	37	1.4	**35/2**	71C 4
131	10.5	38.0	2.4	**41/2**	71C 4
118	11.7	42	1.2	**35/2**	71C 4
114	12.1	43.8	3.7	**45/2**	71C 4
114	12.1	43.8	2.2	**41/2**	71C 4
106	13.0	47.0	2.2	**41/2**	71C 4
101	13.6	49	1.0	**35/2**	71C 4
97	14.2	51.3	3.3	**45/2**	71C 4
95	14.6	53	3.4	**50/2**	71C 4
90	15.3	55.3	1.9	**41/2**	71C 4
88	15.7	57	1.0	**35/2**	71C 4
82	16.8	61	3.1	**50/2**	71C 4
82	16.9	61.1	2.6	**45/2**	71C 4
76	18.2	66	2.8	**50/2**	71C 4
76	18.1	66	0.8	**35/2**	71C 4
75	18.3	66.2	1.6	**41/2**	71C 4
74	18.7	67.6	2.6	**45/2**	71C 4
68	20.2	73.0	1.4	**41/2**	71C 4
66	20.8	75	2.5	**50/2**	71C 4
64	21.5	77.7	2.3	**45/2**	71C 4
58	23.8	86	2.4	**50/2**	71C 4
58	23.9	86.4	1.2	**41/2**	71C 4
54	51.6	90.0	2.0	**45/3**	71B 2
53	25.9	94	2.1	**50/2**	71C 4
52	26.6	96.2	1.7	**45/2**	71C 4
48	28.6	103.4	1.0	**41/2**	71C 4
48	28.5	101	2.1	**50/3**	71C 4
46	29.8	108	1.9	**50/2**	71C 4
46	30.2	109.2	1.5	**45/2**	71C 4
43	32.3	117	3.5	**60/2**	71C 4
43	32.4	115	1.9	**50/3**	71C 4

0.55 kW

n_1= 2800 min^{-1} — 71B 2
n_1= 1380 min^{-1} — 71C 4
n_1= 1390 min^{-1} — 80A 4
n_1= 910 min^{-1} — 80B 6

n_2 min^{-1}	ir	T2 Nm	FS'	AM AC
39	35.7	126	3.3	**60/3**	71C 4
39	35.6	126	1.7	**50/3**	71C 4
37	37.3	134.9	1.3	**45/2**	71C 4
34	40.3	143	2.9	**60/3**	71C 4
34	40.5	143	1.5	**50/3**	71C 4
33	41.4	146.5	1.4	**45/3**	71C 4
31	45.1	160	2.9	**60/3**	71C 4
31	44.6	157.9	1.1	**45/3**	71C 4
30	45.9	166.0	1.0	**45/2**	71C 4
30	46.2	164	1.3	**50/3**	71C 4
27	51.0	181	2.5	**60/3**	71C 4
27	50.8	180	1.2	**50/3**	71C 4
27	51.6	182.6	1.1	**45/3**	71C 4
25	55.2	195	2.4	**60/3**	71C 4
25	54.3	192	1.1	**50/3**	71C 4
23	60.3	213	2.0	**60/3**	71C 4
23	60.6	214.5	0.9	**45/3**	71C 4
21	65.9	233	0.9	**50/3**	71C 4
19.3	71.5	253	0.9	**50/3**	71C 4
19.0	72.7	257	1.8	**60/3**	71C 4
17.6	78.6	278	1.7	**60/3**	71C 4
16.9	82.2	289	3.3	**80/3**	80A 4
15.3	90.4	320	1.4	**60/3**	71C 4
13.8	100.2	355	1.2	**60/3**	71C 4
13.3	104.8	368	2.6	**80/3**	80A 4
12.3	112.2	397	1.2	**60/3**	71C 4
11.9	117.2	412	2.3	**80/3**	80A 4
10.7	128.8	456	1.0	**60/3**	71C 4
10.3	134.3	472	2.0	**80/3**	80A 4
9.7	143.0	506	0.8	**60/3**	71C 4
9.3	149.3	525	1.8	**80/3**	80A 4
8.1	171.2	602	1.6	**80/3**	80A 4
6.8	134.3	721	1.3	**80/3**	80B 6
5.3	171.2	919	1.1	**80/3**	80B 6

0.75 kW

n_1= 2800 min^{-1} — 71C 2
n_1= 1390 min^{-1} — 80B 4
n_1= 920 min^{-1} — 90S 6
n_1= 910 min^{-1} — 80C 6

n_2 min^{-1}	ir	T2 Nm	FS'	AM AC
2333	1.2	3.0	10.1	**40/1**	71C 2
1867	1.5	3.7	9.4	**40/1**	71C 2
1647	1.7	4.2	9.5	**40/1**	71C 2
1556	1.8	4.5	3.2	**32/1**	71C 2
1400	2.0	5.0	9.1	**40/1**	71C 2
1333	2.1	5.2	2.9	**32/1**	71C 2
1158	1.2	6.0	5.0	**40/1**	80B 4
1120	2.5	6.2	2.6	**32/1**	71C 2
933	3.0	7.4	2.3	**32/1**	71C 2
927	1.5	7.5	4.7	**40/1**	80B 4
824	3.4	8.4	2.1	**32/1**	71C 2
772	1.8	9.0	2.4	**32/1**	80B 4
662	2.1	10	2.2	**32/1**	80B 4
556	2.5	12	1.9	**32/1**	80B 4

1.7 Prestazioni motoriduttori

1.7 Gearmotors performances

1.7 Характеристики мотор-редуктора

0.75 kW — n_1= 2800 min^{-1} 71C 2; n_1= 1390 min^{-1} 80B 4; n_1= 920 min^{-1} 90S 6; n_1= 910 min^{-1} 80C 6

n_2 min^{-1}	ir	T2 Nm	FS'	AM AC	
535	1.7	13	3.1	**40/1**	80C 6
463	3.0	15	1.7	**32/1**	80B 4
455	2.0	15	2.9	**40/1**	80C 6
434	3.2	16	3.1	**40/1**	80B 4
409	3.4	17	1.5	**32/1**	80B 4
408	3.4	17	2.1	**35/2**	80B 4
376	3.7	18	2.7	**40/1**	80B 4
356	3.9	19	1.3	**32/1**	80B 4
350	2.6	20	2.5	**40/1**	80C 6
346	4.0	20	1.9	**35/2**	80B 4
309	4.5	22	1.2	**32/1**	80B 4
296	4.7	23	1.7	**35/2**	80B 4
284	4.9	24	1.8	**40/1**	80B 4
273	5.1	25	2.9	**50/1**	80B 4
262	5.3	26	1.0	**32/1**	80B 4
257	5.4	27	1.5	**35/2**	80B 4
244	5.7	28	1.4	**40/1**	80B 4
240	5.8	29	2.2	**50/1**	80B 4
220	6.3	31	1.3	**35/2**	80B 4
211	6.6	33	1.8	**50/1**	80B 4
199	7.0	35	1.1	**40/1**	80B 4
189	7.3	36	1.3	**35/2**	80B 4
188	7.4	36.2	3.6	**45/2**	80B 4
185	7.5	36.7	2.2	**41/2**	80B 4
178	5.1	39	1.9	**50/1**	80C 6
164	8.5	41.6	3.4	**45/2**	80B 4
164	8.5	41.6	2.0	**41/2**	80B 4
160	8.7	42	1.2	**35/2**	80B 4
143	9.7	47.5	3.2	**45/2**	80B 4
137	10.1	50	1.0	**35/2**	80B 4
134	10.4	51	3.4	**50/2**	80B 4
132	10.5	51.4	1.8	**41/2**	80B 4
119	11.7	57	0.9	**35/2**	80B 4
115	12.1	59.2	2.7	**45/2**	80B 4
115	12.1	59.2	1.6	**41/2**	80B 4
111	12.5	61	2.9	**50/2**	80B 4
107	13.0	63.6	1.6	**41/2**	80B 4
98	14.2	69.5	2.4	**45/2**	80B 4
95	14.6	71	2.5	**50/2**	80B 4
91	15.3	74.9	1.4	**41/2**	80B 4
83	16.8	82	2.3	**50/2**	80B 4
82	16.9	82.7	1.9	**45/2**	80B 4
76	18.2	89	2.1	**50/2**	80B 4
76	18.3	89.6	1.2	**41/2**	80B 4
74	18.7	91.5	1.9	**45/2**	80B 4
69	20.2	98.9	1.1	**41/2**	80B 4
67	20.8	102	1.9	**50/2**	80B 4
65	21.5	105.2	1.7	**45/2**	80B 4
58	23.9	117.0	0.9	**41/2**	80B 4
58	23.8	117	1.7	**50/2**	80B 4
54	25.9	127	1.6	**50/2**	80B 4
52	26.6	130.2	1.2	**45/2**	80B 4
49	28.1	138	3.0	**60/2**	80B 4
49	28.5	137	1.6	**50/3**	80B 4

0.75 kW — n_1= 2800 min^{-1} 71C 2; n_1= 1390 min^{-1} 80B 4; n_1= 920 min^{-1} 90S 6; n_1= 910 min^{-1} 80C 6

n_2 min^{-1}	ir	T2 Nm	FS'	AM AC	
47	29.8	146	1.4	**50/2**	80B 4
46	30.2	147.8	1.1	**45/2**	80B 4
44	31.6	151	3.0	**60/3**	80B 4
43	32.3	158	2.6	**60/2**	80B 4
43	32.4	155	1.4	**50/3**	80B 4
39	35.7	171	2.5	**60/3**	80B 4
39	35.6	171	1.2	**50/3**	80B 4
37	37.3	182.6	0.9	**45/2**	80B 4
34	40.3	193	2.2	**60/3**	80B 4
34	40.5	194	1.1	**50/3**	80B 4
34	41.4	198.4	1.0	**45/3**	80B 4
31	44.6	213.7	0.8	**45/3**	80B 4
31	45.1	216	2.1	**60/3**	80B 4
30	46.2	221	1.0	**50/3**	80B 4
27	51.0	244	1.9	**60/3**	80B 4
27	50.8	243	0.9	**50/3**	80B 4
27	51.6	247.3	0.8	**45/3**	80B 4
26	54.3	260	0.8	**50/3**	80B 4
25	55.2	265	1.7	**60/3**	80B 4
23	60.3	289	1.5	**60/3**	80B 4
21	65.7	315	3.1	**80/3**	80B 4
19.1	72.7	348	1.3	**60/3**	80B 4
18.3	76.0	364	2.7	**80/3**	80B 4
17.7	78.6	377	1.2	**60/3**	80B 4
16.9	82.2	394	2.5	**80/3**	80B 4
15.4	90.0	431	2.2	**80/3**	80B 4
15.4	90.4	433	1.1	**60/3**	80B 4
13.9	100.2	480	0.9	**60/3**	80B 4
13.3	104.8	502	1.9	**80/3**	80B 4
12.4	112.2	538	0.9	**60/3**	80B 4
11.9	117.2	562	1.7	**80/3**	80B 4
10.3	134.3	644	1.5	**80/3**	80B 4
9.3	149.3	715	1.4	**80/3**	80B 4
8.1	171.2	820	1.2	**80/3**	80B 4
7.8	117.2	858	1.1	**80/3**	80C 6
6.8	134.3	983	1.0	**80/3**	80C 6
6.1	149.3	1093	0.9	**80/3**	80C 6
5.1	182.0	1318	2.5	**120/3**	90S 6
4.1	222.0	1607	2.1	**120/3**	90S 6
3.3	277.3	2008	1.6	**120/3**	90S 6

0.88 kW — n_1= 1350 min^{-1} 80C 4

n_2 min^{-1}	ir	T2 Nm	FS'	AM AC	
1125	1.2	7.2	4.1	**40/1**	80C 4
900	1.5	9.1	3.9	**40/1**	80C 4
794	1.7	10	3.9	**40/1**	80C 4
750	1.8	11	2.0	**32/1**	80C 4
675	2.0	12	3.7	**40/1**	80C 4
643	2.1	13	1.8	**32/1**	80C 4
540	2.5	15	1.6	**32/1**	80C 4

0.88 kW — n_1= 1350 min^{-1} 80C 4

n_2 min^{-1}	ir	T2 Nm	FS'	AM AC	
519	2.6	16	3.2	**40/1**	80C 4
450	3.0	18	1.4	**32/1**	80C 4
422	3.2	19	2.6	**40/1**	80C 4
397	3.4	21	1.3	**32/1**	80C 4
396	3.4	20.2	1.7	**35/2**	80C 4
365	3.7	22	2.2	**40/1**	80C 4
346	3.9	24	1.1	**32/1**	80C 4
336	4.0	23.8	1.6	**35/2**	80C 4
300	4.5	27	1.0	**32/1**	80C 4
287	4.7	27.8	1.4	**35/2**	80C 4
276	4.9	30	1.5	**40/1**	80C 4
265	5.1	31	2.4	**50/1**	80C 4
255	5.3	32	0.8	**32/1**	80C 4
249	5.4	32	1.2	**35/2**	80C 4
237	5.7	34	1.2	**40/1**	80C 4
233	5.8	35	1.9	**50/1**	80C 4
233	5.8	34.3	3.4	**45/2**	80C 4
213	6.3	37.4	1.1	**35/2**	80C 4
211	6.4	37.8	3.2	**45/2**	80C 4
205	6.6	40	1.5	**50/1**	80C 4
199	6.8	41	3.0	**60/1**	80C 4
193	7.0	42	0.9	**40/1**	80C 4
184	7.3	43.4	1.0	**35/2**	80C 4
182	7.4	43.8	3.0	**45/2**	80C 4
180	7.5	44.4	1.8	**41/2**	80C 4
163	8.3	49	3.2	**50/2**	80C 4
159	8.5	50.3	2.8	**45/2**	80C 4
159	8.5	50.3	1.7	**41/2**	80C 4
156	8.7	51.3	1.0	**35/2**	80C 4
147	9.2	54	3.0	**50/2**	80C 4
139	9.7	57.4	2.6	**45/2**	80C 4
133	10.1	59.9	0.8	**35/2**	80C 4
130	10.4	62	2.8	**50/2**	80C 4
129	10.5	62.1	1.4	**41/2**	80C 4
112	12.1	71.6	2.2	**45/2**	80C 4
112	12.1	71.6	1.3	**41/2**	80C 4
108	12.5	74	2.4	**50/2**	80C 4
104	13.0	76.9	1.3	**41/2**	80C 4
95	14.2	84.0	2.0	**45/2**	80C 4
92	14.6	86	2.1	**50/2**	80C 4
88	15.3	90.5	1.2	**41/2**	80C 4
80	16.8	99	1.9	**50/2**	80C 4
80	16.9	99.9	1.6	**45/2**	80C 4
74	18.3	108	3.5	**60/2**	80C 4
74	18.2	108	1.7	**50/2**	80C 4
74	18.3	108.2	1.0	**41/2**	80C 4
72	18.7	110.6	1.6	**45/2**	80C 4
69	19.7	117	3.3	**60/2**	80C 4
67	20.2	119.5	0.9	**41/2**	80C 4
65	20.8	123	1.5	**50/2**	80C 4
63	21.5	127.1	1.4	**45/2**	80C 4
61	22.1	131	3.3	**60/2**	80C 4
57	23.8	141	1.4	**50/2**	80C 4
53	25.3	150	3.0	**60/2**	80C 4

1.7 Prestazioni motoriduttori

1.7 Gearmotors performances

1.7 Характеристики мотор-редуктора

0.88 kW

n_1= 1350 min^{-1} — 80C 4

n_2 min^{-1}	ir	T2 Nm	FS'	AM AC	
52	25.9	153	1.3	**50/2**	80C 4
51	26.6	157.3	1.0	**45/2**	80C 4
48	28.0	162	2.8	**60/3**	80C 4
48	28.1	166	2.5	**60/2**	80C 4
47	28.5	165	1.3	**50/3**	80C 4
45	29.8	176	1.1	**50/2**	80C 4
45	30.2	178.6	0.9	**45/2**	80C 4
43	31.6	183	2.5	**60/3**	80C 4
42	32.3	191	2.1	**60/2**	80C 4
42	32.4	188	1.2	**50/3**	80C 4
38	35.7	207	2.0	**60/3**	80C 4
38	35.6	206	1.0	**50/3**	80C 4
33	40.3	233	1.8	**60/3**	80C 4
33	40.5	234	0.9	**50/3**	80C 4
33	41.4	239.7	0.8	**45/3**	80C 4
30	45.1	261	1.8	**60/3**	80C 4
29	46.2	267	0.8	**50/3**	80C 4
27	50.9	295	3.3	**80/3**	80C 4
26	51.0	295	1.6	**60/3**	80C 4
25	55.1	319	3.0	**80/3**	80C 4
24	55.2	320	1.4	**60/3**	80C 4
22	60.3	349	1.2	**60/3**	80C 4
21	65.7	380	2.5	**80/3**	80C 4
18.6	72.7	421	1.1	**60/3**	80C 4
17.8	76.0	440	2.2	**80/3**	80C 4
17.2	78.6	455	1.0	**60/3**	80C 4
16.4	82.2	476	2.0	**80/3**	80C 4
15.0	90.0	521	1.9	**80/3**	80C 4
14.9	90.4	523	0.9	**60/3**	80C 4
12.9	104.8	607	1.6	**80/3**	80C 4
11.5	117.2	679	1.4	**80/3**	80C 4
10.1	134.3	778	1.2	**80/3**	80C 4
9.0	149.3	864	1.1	**80/3**	80C 4
7.9	171.2	991	1.0	**80/3**	80C 4

1.1 kW

n_1= 2830 min^{-1} — 80B 2
n_1= 1390 min^{-1} — 80D 4
n_1= 1400 min^{-1} — 90S 4
n_1= 920 min^{-1} — 90L 6

n_2 min^{-1}	ir	T2 Nm	FS'	AM AC	
2358	1.2	4.3	6.9	**40/1**	80B 2
1887	1.5	5.4	6.5	**40/1**	80B 2
1665	1.7	6.1	6.5	**40/1**	80B 2
1572	1.8	6.5	2.2	**32/1**	80B 2
1415	2.0	7.2	6.2	**40/1**	80B 2
1348	2.1	7.6	2.0	**32/1**	80B 2
1286	2.2	7.9	6.3	**40/1**	80B 2
1158	1.2	8.8	3.4	**40/1**	80D 4
943	3.0	11	1.6	**32/1**	80B 2
927	1.5	11	3.2	**40/1**	80D 4
818	1.7	12	3.2	**40/1**	80D 4
772	1.8	13	1.6	**32/1**	80D 4
767	1.2	13	2.3	**40/1**	90L 6
726	3.9	14	1.3	**32/1**	80B 2

1.1 kW

n_1= 2830 min^{-1} — 80B 2
n_1= 1390 min^{-1} — 80D 4
n_1= 1400 min^{-1} — 90S 4
n_1= 920 min^{-1} — 90L 6

n_2 min^{-1}	ir	T2 Nm	FS'	AM AC	
695	2.0	15	3.1	**40/1**	80D 4
662	2.1	15	1.5	**32/1**	80D 4
632	2.2	16	3.1	**40/1**	80D 4
556	2.5	18	1.3	**32/1**	80D 4
535	2.6	19	2.6	**40/1**	80D 4
463	3.0	22	1.1	**32/1**	80D 4
460	2.0	22	2.0	**40/1**	90L 6
434	3.2	23	2.1	**40/1**	80D 4
418	2.2	24	2.1	**40/1**	90L 6
409	3.4	25	1.0	**32/1**	80D 4
408	3.4	24	1.4	**35/2**	80D 4
386	3.6	26	3.4	**50/1**	80D 4
376	3.7	27	1.8	**40/1**	80D 4
356	3.9	29	3.1	**50/1**	80D 4
356	3.9	29	0.9	**32/1**	80D 4
346	4.0	29	1.3	**35/2**	80D 4
309	4.5	33	0.8	**32/1**	80D 4
296	4.7	34	1.2	**35/2**	80D 4
284	4.9	36	1.3	**40/1**	80D 4
273	5.1	37	2.0	**50/1**	80D 4
257	5.4	39	1.0	**35/2**	80D 4
244	5.7	42	1.0	**40/1**	80D 4
240	5.8	43	1.5	**50/1**	80D 4
240	5.8	41.6	2.8	**45/2**	80D 4
236	5.9	43	3.4	**60/1**	80D 4
221	6.3	45	3.2	**50/2**	80D 4
220	6.3	45	0.9	**35/2**	80D 4
217	6.4	45.9	2.6	**45/2**	80D 4
211	6.6	48	1.2	**50/1**	80D 4
189	7.3	53	0.9	**35/2**	80D 4
188	7.4	53	2.9	**50/2**	80D 4
188	7.4	53.1	2.4	**45/2**	80D 4
185	7.5	53.8	1.5	**41/2**	80D 4
167	8.3	60	2.7	**50/2**	80D 4
164	8.5	61.0	2.3	**45/2**	80D 4
164	8.5	61.0	1.4	**41/2**	80D 4
160	8.7	62	0.8	**35/2**	80D 4
151	9.2	66	2.5	**50/2**	80D 4
134	10.4	75	2.3	**50/2**	80D 4
132	10.5	75.4	1.2	**41/2**	80D 4
115	12.1	86.9	1.8	**45/2**	80D 4
115	12.1	86.9	1.1	**41/2**	80D 4
111	12.5	90	1.9	**50/2**	80D 4
107	13.0	93.3	1.1	**41/2**	80D 4
98	14.2	102.0	1.7	**45/2**	80D 4
95	14.6	105	1.7	**50/2**	80D 4
91	15.3	109.8	1.0	**41/2**	80D 4
83	16.8	121	1.6	**50/2**	80D 4
82	16.9	121.3	1.3	**45/2**	80D 4
76	18.3	131	2.9	**60/2**	80D 4
76	18.2	131	1.4	**50/2**	80D 4
76	18.3	131.4	0.8	**41/2**	80D 4
74	18.7	134.3	1.3	**45/2**	80D 4
71	19.7	141	2.7	**60/2**	80D 4

1.1 kW

n_1= 2830 min^{-1} — 80B 2
n_1= 1390 min^{-1} — 80D 4
n_1= 1400 min^{-1} — 90S 4
n_1= 920 min^{-1} — 90L 6

n_2 min^{-1}	ir	T2 Nm	FS'	AM AC	
67	20.8	149	1.3	**50/2**	80D 4
65	21.5	154.4	1.2	**45/2**	80D 4
63	22.1	159	2.7	**60/2**	80D 4
58	23.8	171	1.2	**50/2**	80D 4
55	25.3	182	2.5	**60/2**	80D 4
54	25.9	186	1.1	**50/2**	80D 4
49	28.1	202	2.0	**60/2**	80D 4
47	29.8	214	0.9	**50/2**	80D 4
43	32.3	232	1.8	**60/2**	80D 4
43	32.4	228	0.9	**50/3**	80D 4
39	35.7	251	1.7	**60/3**	80D 4
39	35.6	250	0.8	**50/3**	80D 4
39	23.8	258	0.8	**50/2**	90L 6
34	40.3	283	3.4	**80/3**	80D 4
34	40.3	283	1.5	**60/3**	80D 4
33	28.1	305	1.3	**60/2**	90L 6
32	44.0	309	3.1	**80/3**	80D 4
31	45.1	317	1.5	**60/3**	80D 4
27	50.9	358	2.7	**80/3**	80D 4
27	51.0	358	1.3	**60/3**	80D 4
25	55.1	387	2.5	**80/3**	80D 4
25	55.2	388	1.2	**60/3**	80D 4
23	60.3	424	1.0	**60/3**	80D 4
21	65.7	462	2.1	**80/3**	80D 4
19.1	72.7	511	0.9	**60/3**	80D 4
18.3	76.0	534	1.8	**80/3**	80D 4
17.7	78.6	552	0.8	**60/3**	80D 4
16.9	82.2	578	1.7	**80/3**	80D 4
15.4	90.0	633	1.5	**80/3**	80D 4
15.2	91.9	641	3.1	**100/3**	90S 4
13.3	104.8	737	1.3	**80/3**	80D 4
11.9	117.8	822	2.4	**100/3**	90S 4
11.9	117.2	824	1.2	**80/3**	80D 4
10.8	129.5	904	2.2	**100/3**	90S 4
10.3	134.3	944	1.0	**80/3**	80D 4
9.8	142.9	997	3.3	**120/3**	90S 4
9.5	147.2	1027	1.9	**100/3**	90S 4
9.4	149.3	1042	0.9	**80/3**	90S 4
9.3	149.3	1049	0.9	**80/3**	80D 4
8.7	161.8	1129	1.8	**100/3**	90S 4
8.1	171.2	1203	0.8	**80/3**	80D 4
8.0	175.7	1226	2.7	**120/3**	90S 4
7.1	197.1	1375	2.4	**120/3**	90S 4
7.1	129.5	1375	1.4	**100/3**	90L 6
6.3	222.0	1549	2.1	**120/3**	90S 4
6.3	147.2	1563	1.3	**100/3**	90L 6
5.0	277.3	1935	1.7	**120/3**	90S 4
4.1	222.0	2357	1.4	**120/3**	90L 6
3.3	277.3	2945	1.1	**120/3**	90L 6

1.7 Prestazioni motoriduttori

1.7 Gearmotors performances

1.7 Характеристики мотор-редуктора

n_2 min^{-1}	ir	T2 Nm	FS'	AM AC	
1.5 kW			n_1= 2830 min^{-1} n_1= 1400 min^{-1} n_1= 940 min^{-1} n_1= 925 min^{-1}		80C 2 90L 4 100A 6 90LB 6
2358	1.2	6.0	5.1	**40/1**	80C 2
1887	1.5	7.0	4.8	**40/1**	80C 2
1665	1.7	8.0	4.8	**40/1**	80C 2
1572	1.8	9.0	1.6	**32/1**	80C 2
1167	1.2	12	2.5	**40/1**	90L 4
1132	2.5	12	1.3	**32/1**	80C 2
943	3.0	15	1.2	**32/1**	80C 2
933	1.5	15	2.4	**40/1**	90L 4
884	3.2	16	3.2	**40/1**	80C 2
824	1.7	17	2.4	**40/1**	90L 4
783	1.2	18	1.7	**40/1**	100A 6
765	3.7	18	2.8	**40/1**	80C 2
700	2.0	20	2.3	**40/1**	90L 4
636	2.2	22	2.3	**40/1**	90L 4
578	4.9	24	1.9	**40/1**	80C 2
560	2.5	25	3.2	**50/1**	90L 4
538	2.6	26	1.9	**40/1**	90L 4
500	2.8	28	3.1	**50/1**	90L 4
452	3.1	31	2.9	**50/1**	90L 4
438	3.2	32	1.6	**40/1**	90L 4
424	3.3	33	2.7	**50/1**	90L 4
389	3.6	36	2.5	**50/1**	90L 4
378	3.7	37	1.4	**40/1**	90L 4
359	3.9	39	2.3	**50/1**	90L 4
286	4.9	49	0.9	**40/1**	90L 4
275	5.1	51	1.5	**50/1**	90L 4
269	5.2	52	3.2	**60/1**	90L 4
241	5.8	56.4	2.0	**45/2**	90L 4
241	5.8	58	1.1	**50/1**	90L 4
237	5.9	59	2.5	**60/1**	90L 4
222	6.3	61	2.4	**50/2**	90L 4
219	6.4	62.2	1.9	**45/2**	90L 4
212	6.6	66	0.9	**50/1**	90L 4
206	6.8	67	1.9	**60/1**	90L 4
189	7.4	71.9	1.8	**45/2**	90L 4
189	7.4	72	2.1	**50/2**	90L 4
187	7.5	72.9	1.1	**41/2**	90L 4
169	8.3	81	2.0	**50/2**	90L 4
165	8.5	82.6	1.7	**45/2**	90L 4
165	8.5	82.6	1.0	**41/2**	90L 4
152	9.2	89	1.8	**50/2**	90L 4
144	9.7	94.3	1.6	**45/2**	90L 4
135	10.4	101	1.7	**50/2**	90L 4
133	10.5	102.1	0.9	**41/2**	90L 4
124	11.3	110	3.3	**60/2**	90L 4
116	12.1	117.6	1.4	**45/2**	90L 4
116	12.1	117.6	0.8	**41/2**	90L 4
113	12.4	121	3.1	**60/2**	90L 4
112	12.5	122	1.4	**50/2**	90L 4
108	13.0	126.4	0.8	**41/2**	90L 4
99	14.2	138.0	1.2	**45/2**	90L 4
98	14.3	139	2.8	**60/2**	90L 4
96	14.6	142	1.3	**50/2**	90L 4
90	15.5	151	2.7	**60/2**	90L 4

n_2 min^{-1}	ir	T2 Nm	FS'	AM AC	
1.5 kW			n_1= 2830 min^{-1} n_1= 1400 min^{-1} n_1= 940 min^{-1} n_1= 925 min^{-1}		80C 2 90L 4 100A 6 90LB 6
83	16.8	163	1.2	**50/2**	90L 4
83	16.9	164.3	1.0	**45/2**	90L 4
77	18.3	178	2.1	**60/2**	90L 4
77	18.2	177	1.0	**50/2**	90L 4
75	18.7	181.8	1.0	**45/2**	90L 4
71	19.7	191	2.0	**60/2**	90L 4
67	20.8	202	0.9	**50/2**	90L 4
65	21.5	209.0	0.9	**45/2**	90L 4
63	22.1	215	2.0	**60/2**	90L 4
59	23.8	231	0.9	**50/2**	90L 4
55	25.3	246	1.8	**60/2**	90L 4
50	28.1	273	1.5	**60/2**	90L 4
48	28.9	281	3.3	**80/2**	90L 4
44	31.8	309	3.0	**80/2**	90L 4
43	32.3	314	1.3	**60/2**	90L 4
39	35.7	340	2.8	**80/3**	90L 4
39	35.7	340	1.2	**60/3**	90L 4
35	40.3	383	2.5	**80/3**	90L 4
35	40.3	383	1.1	**60/3**	90L 4
32	44.0	419	2.3	**80/3**	90L 4
31	45.1	429	1.1	**60/3**	90L 4
28	50.9	484	2.0	**80/3**	90L 4
27	51.0	485	0.9	**60/3**	90L 4
25	55.1	524	1.8	**80/3**	90L 4
25	55.2	525	0.9	**60/3**	90L 4
22	64.5	614	3.2	**100/3**	90L 4
21	65.7	625	1.5	**80/3**	90L 4
19.0	73.6	700	2.8	**100/3**	90L 4
18.4	76.0	723	1.3	**80/3**	90L 4
17.7	78.9	751	2.6	**100/3**	90L 4
17.0	82.2	782	1.2	**80/3**	90L 4
15.6	90.0	856	1.1	**80/3**	90L 4
15.2	91.9	875	2.3	**100/3**	90L 4
14.2	98.6	938	2.1	**100/3**	90L 4
13.6	102.6	976	3.4	**120/3**	90L 4
13.4	104.8	997	1.0	**80/3**	90L 4
12.2	114.4	1089	3.0	**120/3**	90L 4
11.9	117.8	1121	1.8	**100/3**	90L 4
11.9	117.2	1115	0.9	**80/3**	90L 4
11.2	124.9	1189	2.8	**120/3**	90L 4
10.8	129.5	1232	1.6	**100/3**	90L 4
9.8	142.9	1360	2.4	**120/3**	90L 4
9.5	147.2	1401	1.4	**100/3**	90L 4
9.4	98.6	1420	1.4	**100/3**	90LB 6
9.0	156.0	1484	2.2	**120/3**	90L 4
8.7	161.8	1540	1.3	**100/3**	90L 4
8.0	175.7	1672	2.0	**120/3**	90L 4
7.9	117.8	1697	1.2	**100/3**	90LB 6
7.7	182.0	1732	1.9	**120/3**	90L 4
7.1	197.1	1876	1.8	**120/3**	90L 4
7.1	129.5	1865	1.1	**100/3**	90LB 6
6.8	205.0	1951	1.7	**120/3**	90L 4
6.4	147.2	2086	1.0	**100/3**	100A 6
6.3	222.0	2113	1.6	**120/3**	90L 4

n_2 min^{-1}	ir	T2 Nm	FS'	AM AC	
1.5 kW			n_1= 2830 min^{-1} n_1= 1400 min^{-1} n_1= 940 min^{-1} n_1= 925 min^{-1}		80C 2 90L 4 100A 6 90LB 6
5.7	161.8	2330	0.9	**100/3**	90LB 6
5.0	277.3	2639	1.3	**120/3**	90L 4
4.2	222.0	3197	1.0	**120/3**	90LB 6
3.3	277.3	3994	0.8	**120/3**	90LB 6
1.8 kW			n_1= 2770 min^{-1} n_1= 1400 min^{-1} n_1= 940 min^{-1}		80D 2 90LB 4 100B 6
2308	1.2	7.0	4.2	**40/1**	80D 2
1847	1.5	9.0	3.9	**40/1**	80D 2
1629	1.7	10	3.9	**40/1**	80D 2
1539	1.8	11	1.3	**32/1**	80D 2
1167	1.2	14	2.1	**40/1**	90LB 4
1077	1.3	15	3.6	**50/1**	90LB 4
933	1.5	18	3.5	**50/1**	90LB 4
933	1.5	18	2.0	**40/1**	90LB 4
824	1.7	20	2.0	**40/1**	90LB 4
749	3.7	22	2.2	**40/1**	80D 2
700	2.0	24	3.4	**50/1**	90LB 4
700	2.0	24	1.9	**40/1**	90LB 4
636	2.2	26	1.9	**40/1**	90LB 4
627	1.5	27	2.4	**50/1**	100B 6
560	2.5	30	2.7	**50/1**	90LB 4
538	2.6	31	1.6	**40/1**	90LB 4
500	2.8	33	2.5	**50/1**	90LB 4
452	3.1	37	2.4	**50/1**	90LB 4
438	3.2	38	1.3	**40/1**	90LB 4
424	3.3	39	2.3	**50/1**	90LB 4
389	3.6	43	2.1	**50/1**	90LB 4
378	3.7	44	1.1	**40/1**	90LB 4
359	3.9	46	1.9	**50/1**	90LB 4
298	4.7	56	3.0	**60/1**	90LB 4
275	5.1	61	1.2	**50/1**	90LB 4
269	5.2	62	2.6	**60/1**	90LB 4
241	5.8	67.7	1.7	**45/2**	90LB 4
241	5.8	69	0.9	**50/1**	90LB 4
237	5.9	70	2.1	**60/1**	90LB 4
222	6.3	73	2.0	**50/2**	90LB 4
219	6.4	74.7	1.6	**45/2**	90LB 4
206	6.8	81	1.5	**60/1**	90LB 4
189	7.4	86.3	1.5	**45/2**	90LB 4
189	7.4	86	1.8	**50/2**	90LB 4
187	7.5	87.5	0.9	**41/2**	90LB 4
169	8.3	97	1.6	**50/2**	90LB 4
165	8.5	99.1	1.4	**45/2**	90LB 4
165	8.5	99.1	0.9	**41/2**	90LB 4
157	8.9	104	3.4	**60/2**	90LB 4
144	9.7	113.1	1.3	**45/2**	90LB 4
139	10.1	118	3.0	**60/2**	90LB 4
135	10.4	121	1.4	**50/2**	90LB 4

1.7 Prestazioni motoriduttori

1.7 Gearmotors performances

1.7 Характеристики мотор-редуктора

1.8 kW

n_1= 2770 min^{-1} — 80D 2
n_1= 1400 min^{-1} — 90LB 4
n_1= 940 min^{-1} — 100B 6

n_2 min^{-1}	ir	T2 Nm	FS'	AM AC	
124	11.3	132	2.8	**60/2**	90LB 4
116	12.1	141.1	1.1	**45/2**	90LB 4
113	12.4	145	2.6	**60/2**	90LB 4
112	12.5	146	1.2	**50/2**	90LB 4
99	14.2	165.6	1.0	**45/2**	90LB 4
96	14.6	170	1.1	**50/2**	90LB 4
90	15.5	181	2.2	**60/2**	90LB 4
83	16.8	196	1.0	**50/2**	90LB 4
83	16.9	197.1	0.8	**45/2**	90LB 4
77	18.3	213	1.8	**60/2**	90LB 4
77	18.2	212	0.9	**50/2**	90LB 4
75	18.7	218.1	0.8	**45/2**	90LB 4
71	19.7	230	1.7	**60/2**	90LB 4
63	22.1	258	1.7	**60/2**	90LB 4
62	22.7	265	3.4	**80/2**	90LB 4
56	24.9	290	3.2	**80/2**	90LB 4
55	25.3	295	1.5	**60/2**	90LB 4
50	28.1	328	1.3	**60/2**	90LB 4
48	28.9	337	2.8	**80/2**	90LB 4
44	31.8	371	2.5	**80/2**	90LB 4
43	32.3	377	1.1	**60/2**	90LB 4
39	35.7	408	2.4	**80/3**	90LB 4
39	35.7	408	1.0	**60/3**	90LB 4
35	40.3	460	2.1	**80/3**	90LB 4
35	40.3	460	0.9	**60/3**	90LB 4
32	44.0	502	1.9	**80/3**	90LB 4
31	45.1	515	0.9	**60/3**	90LB 4
28	50.9	581	1.7	**80/3**	90LB 4
27	52.8	603	3.3	**100/3**	90LB 4
25	56.7	647	3.1	**100/3**	90LB 4
25	55.1	629	1.5	**80/3**	90LB 4
22	64.5	737	2.7	**100/3**	90LB 4
21	65.7	750	1.3	**80/3**	90LB 4
19.0	73.6	840	2.4	**100/3**	90LB 4
18.4	76.0	868	1.1	**80/3**	90LB 4
17.7	78.9	901	2.2	**100/3**	90LB 4
17.0	82.2	939	3.5	**120/3**	90LB 4
17.0	82.2	939	1.0	**80/3**	90LB 4
15.6	90.0	1028	0.9	**80/3**	90LB 4
15.4	90.7	1036	3.2	**120/3**	90LB 4
15.2	91.9	1049	1.9	**100/3**	90LB 4
14.2	98.6	1126	1.8	**100/3**	90LB 4
13.6	102.6	1172	2.8	**120/3**	90LB 4
13.4	104.8	1197	0.8	**80/3**	90LB 4
12.2	114.4	1306	2.5	**120/3**	90LB 4
11.9	117.8	1345	1.5	**100/3**	90LB 4
11.2	124.9	1426	2.3	**120/3**	90LB 4
10.8	129.5	1479	1.3	**100/3**	90LB 4
9.8	142.9	1632	2.0	**120/3**	90LB 4
9.5	147.2	1681	1.2	**100/3**	90LB 4
9.0	156.0	1781	1.9	**120/3**	90LB 4
8.7	161.8	1848	1.1	**100/3**	90LB 4
8.0	175.7	2006	1.6	**120/3**	90LB 4
7.7	182.0	2078	1.6	**120/3**	90LB 4

1.8 kW

n_1= 2770 min^{-1} — 80D 2
n_1= 1400 min^{-1} — 90LB 4
n_1= 940 min^{-1} — 100B 6

n_2 min^{-1}	ir	T2 Nm	FS'	AM AC	
7.1	197.1	2251	1.5	**120/3**	90LB 4
6.8	205.0	2341	1.4	**120/3**	90LB 4
6.3	222.0	2535	1.3	**120/3**	90LB 4
5.5	256.0	2923	1.1	**120/3**	90LB 4
5.0	277.3	3167	1.0	**120/3**	90LB 4
4.2	222.0	3776	0.9	**120/3**	100B 6

2.2 kW

n_1= 2840 min^{-1} — 90L 2
n_1= 1410 min^{-1} — 100A 4

n_2 min^{-1}	ir	T2 Nm	FS'	AM AC	
2367	1.2	9.0	3.5	**40/1**	90L 2
1893	1.5	11	3.3	**40/1**	90L 2
1671	1.7	12	3.3	**40/1**	90L 2
1420	2.0	14	3.1	**40/1**	90L 2
1291	2.2	16	3.2	**40/1**	90L 2
1175	1.2	17	1.7	**40/1**	100A 4
1085	1.3	19	2.9	**50/1**	100A 4
940	1.5	22	2.9	**50/1**	100A 4
940	1.5	22	1.6	**40/1**	100A 4
829	1.7	25	1.6	**40/1**	100A 4
783	1.8	26	3.1	**50/1**	100A 4
705	2.0	29	2.8	**50/1**	100A 4
705	2.0	29	1.6	**40/1**	100A 4
641	2.2	32	1.6	**40/1**	100A 4
564	2.5	36	2.2	**50/1**	100A 4
542	2.6	38	1.3	**40/1**	100A 4
504	2.8	40	2.1	**50/1**	100A 4
455	3.1	45	2.0	**50/1**	100A 4
441	3.2	46	1.1	**40/1**	100A 4
427	3.3	48	1.9	**50/1**	100A 4
415	3.4	49	3.5	**60/1**	100A 4
392	3.6	52	3.3	**60/1**	100A 4
392	3.6	52	1.7	**50/1**	100A 4
381	3.7	53	0.9	**40/1**	100A 4
362	3.9	56	1.6	**50/1**	100A 4
300	4.7	68	2.5	**60/1**	100A 4
276	5.1	74	1.0	**50/1**	100A 4
271	5.2	75	2.2	**60/1**	100A 4
243	5.8	82.1	1.4	**45/2**	100A 4
239	5.9	85	1.7	**60/1**	100A 4
224	6.3	89	1.6	**50/2**	100A 4
220	6.4	90.6	1.3	**45/2**	100A 4
220	6.4	93	3.6	**80/1**	100A 4
207	6.8	98	1.3	**60/1**	100A 4
191	7.4	104.8	1.2	**45/2**	100A 4
178	7.9	112	3.0	**60/2**	100A 4
170	8.3	117	1.3	**50/2**	100A 4
166	8.5	120.3	1.2	**45/2**	100A 4
158	8.9	126	2.8	**60/2**	100A 4
153	9.2	130	1.3	**50/2**	100A 4

2.2 kW

n_1= 2840 min^{-1} — 90L 2
n_1= 1410 min^{-1} — 100A 4

n_2 min^{-1}	ir	T2 Nm	FS'	AM AC	
145	9.7	137.3	1.1	**45/2**	100A 4
140	10.1	143	2.5	**60/2**	100A 4
136	10.4	147	1.2	**50/2**	100A 4
125	11.3	160	2.3	**60/2**	100A 4
117	12.1	171.3	0.9	**45/2**	100A 4
114	12.4	176	2.1	**60/2**	100A 4
113	12.5	177	1.0	**50/2**	100A 4
99	14.2	201.0	0.8	**45/2**	100A 4
99	14.3	202	1.9	**60/2**	100A 4
97	14.6	207	0.9	**50/2**	100A 4
91	15.5	219	1.8	**60/2**	100A 4
78	18.1	256	3.4	**80/2**	100A 4
77	18.3	259	1.5	**60/2**	100A 4
73	19.4	275	3.2	**80/2**	100A 4
72	19.7	279	1.4	**60/2**	100A 4
64	22.1	313	1.4	**60/2**	100A 4
62	22.7	321	2.8	**80/2**	100A 4
57	24.9	352	2.7	**80/2**	100A 4
56	25.3	358	1.3	**60/2**	100A 4
50	28.1	398	1.0	**60/2**	100A 4
49	28.9	409	2.3	**80/2**	100A 4
44	31.8	450	2.1	**80/2**	100A 4
44	32.3	457	0.9	**60/2**	100A 4
39	35.7	495	2.0	**80/3**	100A 4
39	35.7	495	0.8	**60/3**	100A 4
35	40.6	563	3.5	**100/3**	100A 4
35	40.3	558	1.7	**80/3**	100A 4
32	44.0	610	1.6	**80/3**	100A 4
31	45.2	626	3.2	**100/3**	100A 4
28	50.9	705	1.4	**80/3**	100A 4
27	52.8	732	2.7	**100/3**	100A 4
26	55.1	764	1.3	**80/3**	100A 4
25	56.7	786	2.5	**100/3**	100A 4
22	64.5	894	2.2	**100/3**	100A 4
21	65.7	910	1.1	**80/3**	100A 4
19.4	72.6	1006	3.3	**120/3**	100A 4
19.2	73.6	1020	1.9	**100/3**	100A 4
18.6	76.0	1053	0.9	**80/3**	100A 4
18.1	77.7	1077	3.1	**120/3**	100A 4
17.9	78.9	1093	1.8	**100/3**	100A 4
17.2	82.2	1139	2.9	**120/3**	100A 4
17.2	82.2	1139	0.8	**80/3**	100A 4
15.5	90.7	1257	2.6	**120/3**	100A 4
15.3	91.9	1274	1.6	**100/3**	100A 4
14.3	98.6	1366	1.5	**100/3**	100A 4
13.7	102.6	1422	2.3	**120/3**	100A 4
12.3	114.4	1585	2.1	**120/3**	100A 4
12.0	117.8	1632	1.2	**100/3**	100A 4
11.3	124.9	1731	1.9	**120/3**	100A 4
10.9	129.5	1795	1.1	**100/3**	100A 4
9.9	142.9	1980	1.7	**120/3**	100A 4
9.6	147.2	2040	1.0	**100/3**	100A 4
9.0	156.0	2162	1.5	**120/3**	100A 4
8.7	161.8	2242	0.9	**100/3**	100A 4

1.7 Prestazioni motoriduttori

n_2 min^{-1}	ir	T2 Nm	FS'	AM AC	
2.2 kW			n_1= 2840 min^{-1} n_1= 1410 min^{-1}		90L 2 100A 4
8.0	175.7	2435	1.4	**120/3**	100A 4
7.7	182.0	2522	1.3	**120/3**	100A 4
7.2	197.1	2731	1.2	**120/3**	100A 4
6.9	205.0	2841	1.2	**120/3**	100A 4
6.4	222.0	3076	1.1	**120/3**	100A 4
5.5	256.0	3548	0.9	**120/3**	100A 4
5.1	277.3	3843	0.9	**120/3**	100A 4
3 kW			n_1= 2840 min^{-1} n_1= 1420 min^{-1}		90LB 2 100B 4
2367	1.2	12	2.6	**40/1**	90LB 2
1893	1.5	15	2.4	**40/1**	90LB 2
1671	1.7	17	2.4	**40/1**	90LB 2
1420	2.0	20	2.3	**40/1**	90LB 2
1291	2.2	22	2.3	**40/1**	90LB 2
1183	1.2	23	1.3	**40/1**	100B 4
1092	1.3	25	2.2	**50/1**	100B 4
947	1.5	29	2.1	**50/1**	100B 4
947	1.5	29	1.2	**40/1**	100B 4
835	1.7	33	1.2	**40/1**	100B 4
789	1.8	35	2.3	**50/1**	100B 4
710	2.0	39	2.0	**50/1**	100B 4
710	2.0	39	1.1	**40/1**	100B 4
645	2.2	43	1.2	**40/1**	100B 4
568	2.5	49	1.6	**50/1**	100B 4
546	2.6	51	1.0	**40/1**	100B 4
526	2.7	53	3.2	**60/1**	100B 4
507	2.8	55	1.6	**50/1**	100B 4
490	2.9	57	3.0	**60/1**	100B 4
458	3.1	61	1.5	**50/1**	100B 4
430	3.3	65	1.4	**50/1**	100B 4
418	3.4	67	2.6	**60/1**	100B 4
394	3.6	70	2.4	**60/1**	100B 4
394	3.6	70	1.3	**50/1**	100B 4
364	3.9	76	1.2	**50/1**	100B 4
302	4.7	92	1.8	**60/1**	100B 4
296	4.8	94	3.5	**80/1**	100B 4
273	5.2	102	1.6	**60/1**	100B 4
268	5.3	104	3.2	**80/1**	100B 4
245	5.8	114	2.9	**80/1**	100B 4
245	5.8	111.2	1.0	**45/2**	100B 4
241	5.9	115	1.3	**60/1**	100B 4
225	6.3	121	1.2	**50/2**	100B 4
222	6.4	125	2.6	**80/1**	100B 4
222	6.4	122.7	1.0	**45/2**	100B 4
209	6.8	133	0.9	**60/1**	100B 4
192	7.4	142	1.1	**50/2**	100B 4
192	7.4	141.8	0.9	**45/2**	100B 4
180	7.9	151	2.2	**60/2**	100B 4
171	8.3	159	1.0	**50/2**	100B 4

1.7 Gearmotors performances

n_2 min^{-1}	ir	T2 Nm	FS'	AM AC	
3 kW			n_1= 2840 min^{-1} n_1= 1420 min^{-1}		90LB 2 100B 4
167	8.5	162.9	0.9	**45/2**	100B 4
154	9.2	176	0.9	**50/2**	100B 4
146	9.7	185.9	0.8	**45/2**	100B 4
141	10.1	194	1.9	**60/2**	100B 4
137	10.4	199	0.9	**50/2**	100B 4
126	11.3	217	1.7	**60/2**	100B 4
115	12.4	238	3.3	**80/2**	100B 4
115	12.4	238	1.6	**60/2**	100B 4
100	14.2	272	3.0	**80/2**	100B 4
99	14.3	274	1.4	**60/2**	100B 4
93	15.2	291	2.9	**80/2**	100B 4
92	15.5	297	1.4	**60/2**	100B 4
78	18.1	347	2.5	**80/2**	100B 4
78	18.3	351	1.1	**60/2**	100B 4
73	19.4	372	2.4	**80/2**	100B 4
72	19.7	378	1.0	**60/2**	100B 4
64	22.1	424	1.0	**60/2**	100B 4
63	22.7	435	2.1	**80/2**	100B 4
57	24.9	477	2.0	**80/2**	100B 4
56	25.3	485	0.9	**60/2**	100B 4
51	28.0	525	0.9	**60/3**	100B 4
49	28.9	554	1.7	**80/2**	100B 4
45	31.8	610	1.5	**80/2**	100B 4
44	32.5	610	3.3	**100/3**	100B 4
40	35.7	670	1.4	**80/3**	100B 4
39	36.4	683	2.9	**100/3**	100B 4
35	40.6	762	2.6	**100/3**	100B 4
35	40.3	756	1.3	**80/3**	100B 4
32	44.0	826	1.2	**80/3**	100B 4
31	45.2	848	2.3	**100/3**	100B 4
28	50.9	955	1.0	**80/3**	100B 4
27	52.8	991	2.0	**100/3**	100B 4
26	55.1	1034	0.9	**80/3**	100B 4
25	57.1	1071	3.1	**120/3**	100B 4
25	56.7	1064	1.9	**100/3**	100B 4
23	62.2	1167	2.8	**120/3**	100B 4
22	64.5	1210	1.6	**100/3**	100B 4
19.6	72.6	1362	2.4	**120/3**	100B 4
19.3	73.6	1381	1.4	**100/3**	100B 4
18.3	77.7	1458	2.3	**120/3**	100B 4
18.0	78.9	1480	1.3	**100/3**	100B 4
17.3	82.2	1542	2.1	**120/3**	100B 4
15.7	90.7	1702	1.9	**120/3**	100B 4
15.5	91.9	1724	1.2	**100/3**	100B 4
14.4	98.6	1850	1.1	**100/3**	100B 4
13.8	102.6	1925	1.7	**120/3**	100B 4
12.4	114.4	2147	1.5	**120/3**	100B 4
12.1	117.8	2210	0.9	**100/3**	100B 4
11.4	124.9	2344	1.4	**120/3**	100B 4
11.0	129.5	2430	0.8	**100/3**	100B 4
9.9	142.9	2681	1.2	**120/3**	100B 4
9.1	156.0	2927	1.1	**120/3**	100B 4
8.1	175.7	3297	1.0	**120/3**	100B 4
7.8	182.0	3415	1.0	**120/3**	100B 4

1.7 Характеристики мотор-редуктора

n_2 min^{-1}	ir	T2 Nm	FS'	AM AC	
3 kW			n_1= 2840 min^{-1} n_1= 1420 min^{-1}		90LB 2 100B 4
7.2	197.1	3698	0.9	**120/3**	100B 4
6.9	205.0	3847	0.9	**120/3**	100B 4
4 kW			n_1= 2860 min^{-1} n_1= 1410 min^{-1}		100B 2 100BL 4
2383	1.2	16	1.9	**40/1**	100B 2
2200	1.3	17	3.3	**50/1**	100B 2
1907	1.5	19	3.2	**50/1**	100B 2
1907	1.5	19	1.8	**40/1**	100B 2
1682	1.7	22	1.8	**40/1**	100B 2
1589	1.8	23	3.4	**50/1**	100B 2
1430	2.0	26	3.1	**50/1**	100B 2
1430	2.0	26	1.7	**40/1**	100B 2
1300	2.2	29	1.8	**40/1**	100B 2
1175	1.2	32	1.0	**40/1**	100BL 4
1085	1.3	34	1.6	**50/1**	100BL 4
940	1.5	39	1.6	**50/1**	100BL 4
940	1.5	39	0.9	**40/1**	100BL 4
881	1.6	42	3.3	**60/1**	100BL 4
829	1.7	45	0.9	**40/1**	100BL 4
783	1.8	47	3.1	**60/1**	100BL 4
783	1.8	47	1.7	**50/1**	100BL 4
705	2.0	53	1.5	**50/1**	100BL 4
705	2.0	53	0.9	**40/1**	100BL 4
671	2.1	55	2.9	**60/1**	100BL 4
641	2.2	58	0.9	**40/1**	100BL 4
588	2.4	63	2.7	**60/1**	100BL 4
564	2.5	66	1.2	**50/1**	100BL 4
522	2.7	71	2.4	**60/1**	100BL 4
504	2.8	74	1.2	**50/1**	100BL 4
486	2.9	76	2.2	**60/1**	100BL 4
455	3.1	81	1.1	**50/1**	100BL 4
427	3.3	87	1.0	**50/1**	100BL 4
415	3.4	89	1.9	**60/1**	100BL 4
392	3.6	95	3.5	**80/1**	100BL 4
392	3.6	95	1.8	**60/1**	100BL 4
392	3.6	95	1.0	**50/1**	100BL 4
362	3.9	102	0.9	**50/1**	100BL 4
300	4.7	124	1.4	**60/1**	100BL 4
294	4.8	126	2.6	**80/1**	100BL 4
271	5.2	137	1.2	**60/1**	100BL 4
266	5.3	139	2.4	**80/1**	100BL 4
243	5.8	152	2.2	**80/1**	100BL 4
239	5.9	155	0.9	**60/1**	100BL 4
224	6.3	162	0.9	**50/2**	100BL 4
220	6.4	168	2.0	**80/1**	100BL 4
191	7.4	190	0.8	**50/2**	100BL 4
181	7.8	201	3.5	**80/2**	100BL 4
178	7.9	203	1.7	**60/2**	100BL 4
162	8.7	224	3.3	**80/2**	100BL 4
158	8.9	229	1.5	**60/2**	100BL 4

1.7 Prestazioni motoriduttori

1.7 Gearmotors performances

1.7 Характеристики мотор-редуктора

4 kW

n_1= 2860 min^{-1} — 100B 2
n_1= 1410 min^{-1} — 100BL 4

n_2 min^{-1}	ir	T2 Nm	FS'	AM AC	
141	10.0	257	2.9	**80/2**	100BL 4
140	10.1	260	1.4	**60/2**	100BL 4
127	11.1	286	2.7	**80/2**	100BL 4
125	11.3	291	1.3	**60/2**	100BL 4
114	12.4	319	2.5	**80/2**	100BL 4
114	12.4	319	1.2	**60/2**	100BL 4
99	14.2	365	2.2	**80/2**	100BL 4
93	15.2	391	2.1	**80/2**	100BL 4
91	15.5	399	1.0	**60/2**	100BL 4
78	18.1	466	1.9	**80/2**	100BL 4
77	18.3	471	0.8	**60/2**	100BL 4
73	19.4	499	1.8	**80/2**	100BL 4
62	22.7	584	1.6	**80/2**	100BL 4
57	24.9	641	1.5	**80/2**	100BL 4
49	28.9	744	1.3	**80/2**	100BL 4
48	29.1	733	2.7	**100/3**	100BL 4
44	31.8	818	1.1	**80/2**	100BL 4
43	32.5	819	2.4	**100/3**	100BL 4
39	36.4	917	2.2	**100/3**	100BL 4
39	35.7	899	1.1	**80/3**	100BL 4
35	40.7	1025	3.2	**120/3**	100BL 4
35	40.6	1023	1.9	**100/3**	100BL 4
35	40.3	1015	1.0	**80/3**	100BL 4
32	44.0	1109	0.9	**80/3**	100BL 4
31	45.7	1151	2.9	**120/3**	100BL 4
31	45.2	1139	1.7	**100/3**	100BL 4
28	50.9	1282	2.6	**120/3**	100BL 4
27	52.8	1330	1.5	**100/3**	100BL 4
25	57.1	1439	2.3	**120/3**	100BL 4
25	56.7	1429	1.4	**100/3**	100BL 4
23	62.2	1567	2.1	**120/3**	100BL 4
22	64.5	1625	1.2	**100/3**	100BL 4
19.4	72.6	1829	1.8	**120/3**	100BL 4
19.2	73.6	1854	1.1	**100/3**	100BL 4
18.1	77.7	1958	1.7	**120/3**	100BL 4
17.9	78.9	1988	1.0	**100/3**	100BL 4
17.2	82.2	2071	1.6	**120/3**	100BL 4
15.5	90.7	2285	1.4	**120/3**	100BL 4
15.3	91.9	2315	0.9	**100/3**	100BL 4
13.7	102.6	2585	1.3	**120/3**	100BL 4
12.3	114.4	2882	1.1	**120/3**	100BL 4
11.3	124.9	3147	1.0	**120/3**	100BL 4
9.9	142.9	3600	0.9	**120/3**	100BL 4
9.0	156.0	3931	0.8	**120/3**	100BL 4

5.5 kW

n_1= 2880 min^{-1} — 112B 2
n_1= 1440 min^{-1} — 132S 4
n_1= 1400 min^{-1}1 — 112BL 4

n_2 min^{-1}	ir	T2 Nm	FS'	AM AC	
2400	1.2	21	1.4	**40/1***	112B 2
2215	1.3	23	2.4	**50/1**	112B 2
1920	1.5	27	2.4	**50/1**	112B 2
1920	1.5	27	1.3	**40/1***	112B 2

5.5 kW

n_1= 2880 min^{-1} — 112B 2
n_1= 1440 min^{-1} — 132S 4
n_1= 1400 min^{-1}1 — 112BL 4

n_2 min^{-1}	ir	T2 Nm	FS'	AM AC	
1694	1.7	30	1.3	**40/1***	112B 2
1600	1.8	32	2.5	**50/1**	112B 2
1440	2.0	35	2.3	**50/1**	112B 2
1440	2.0	35	1.3	**40/1***	112B 2
1309	2.2	39	1.3	**40/1***	112B 2
1077	1.3	47	2.7	**60/1**	112BL 4
1077	1.3	47	1.2	**50/1**	112BL 4
933	1.5	55	1.2	**50/1**	112BL 4
875	1.6	58	2.4	**60/1**	112BL 4
778	1.8	66	2.2	**60/1**	112BL 4
778	1.8	66	1.2	**50/1**	112BL 4
700	2.0	73	1.1	**50/1**	112BL 4
667	2.1	76	2.1	**60/1**	112BL 4
583	2.4	87	1.9	**60/1**	112BL 4
560	2.5	91	0.9	**50/1**	112BL 4
519	2.7	98	3.4	**80/1**	112BL 4
519	2.7	98	1.7	**60/1**	112BL 4
500	2.8	102	0.8	**50/1**	112BL 4
483	2.9	106	3.1	**80/1**	112BL 4
483	2.9	106	1.6	**60/1**	112BL 4
424	3.3	120	2.7	**80/1**	112BL 4
412	3.4	124	1.4	**60/1**	112BL 4
389	3.6	131	2.5	**80/1**	112BL 4
389	3.6	131	1.3	**60/1**	112BL 4
298	4.7	171	1.0	**60/1**	112BL 4
292	4.8	175	1.9	**80/1**	112BL 4
269	5.2	189	0.9	**60/1**	112BL 4
264	5.3	193	1.7	**80/1**	112BL 4
241	5.8	211	1.6	**80/1**	112BL 4
219	6.4	233	1.4	**80/1**	112BL 4
209	6.9	244	2.0	**100/1**	132S 4
192	7.5	265	1.8	**100/1**	132S 4
179	7.8	278	2.5	**80/2**	112BL 4
177	7.9	282	1.2	**60/2**	112BL 4
161	8.7	310	2.3	**80/2**	112BL 4
157	8.9	317	1.1	**60/2**	112BL 4
140	10.0	356	2.1	**80/2**	112BL 4
139	10.1	360	1.0	**60/2**	112BL 4
126	11.1	396	1.9	**80/2**	112BL 4
113	12.4	442	1.8	**80/2**	112BL 4
113	12.4	442	0.8	**60/2**	112BL 4
99	14.2	506	1.6	**80/2**	112BL 4
92	15.2	542	1.6	**80/2**	112BL 4
91	15.9	551	3.1	**100/2**	132S 4
82	17.6	610	2.9	**100/2**	132S 4
77	18.1	645	1.3	**80/2**	112BL 4
72	19.9	690	2.6	**100/2**	132S 4
72	19.4	691	1.3	**80/2**	112BL 4
65	22.2	769	2.4	**100/2**	132S 4
62	22.7	809	1.1	**80/2**	112BL 4
60	24.2	839	2.3	**100/2**	132S 4
56	24.9	887	1.1	**80/2**	112BL 4
48	28.9	1030	0.9	**80/2**	112BL 4
44	31.8	1133	0.8	**80/2**	112BL 4

5.5 kW

n_1= 2880 min^{-1} — 112B 2
n_1= 1440 min^{-1} — 132S 4
n_1= 1400 min^{-1}1 — 112BL 4

n_2 min^{-1}	ir	T2 Nm	FS'	AM AC	
43	32.5	1134	1.8	**100/3**	112BL 4
41	35.3	1223	1.6	**100/2**	132S 4
39	37.0	1282	2.3	**120/2**	132S 4
38	38.3	1327	1.5	**100/2**	132S 4
34	40.6	1417	1.4	**100/3**	112BL 4
34	40.7	1420	2.3	**120/3**	112BL 4
31	45.2	1577	1.3	**100/3**	112BL 4
31	45.7	1595	2.1	**120/3**	112BL 4
28	50.9	1776	1.9	**120/3**	112BL 4
27	52.8	1842	1.1	**100/3**	112BL 4
25	56.7	1978	1.0	**100/3**	112BL 4
25	57.1	1992	1.7	**120/3**	112BL 4
23	62.2	2170	1.5	**120/3**	112BL 4
22	64.5	2251	0.9	**100/3**	112BL 4
19.3	72.6	2533	1.3	**120/3**	112BL 4
18.0	77.7	2711	1.2	**120/3**	112BL 4
15.4	90.7	3165	1.0	**120/3**	112BL 4
13.6	102.6	3580	0.9	**120/3**	112BL 4
12.2	114.4	3992	0.8	**120/3**	112BL 4

7.5 kW

n_1= 2890 min^{-1} — 132SL 2
n_1= 2860 min^{-1} — 112BL 2
n_1= 1440 min^{-1} — 132M 4

n_2 min^{-1}	ir	T2 Nm	FS'	AM AC	
2383	1.2	29	1.0	**40/1***	112BL 2
2200	1.3	32	1.7	**50/1***	112BL 2
1907	1.5	36	1.7	**50/1***	112BL 2
1907	1.5	36	1.0	**40/1***	112BL 2
1682	1.7	41	1.0	**40/1***	112BL 2
1606	1.8	43	3.4	**60/1**	132SL 2
1589	1.8	44	3.3	**60/1**	112BL 2
1589	1.8	44	1.8	**50/1***	112BL 2
1430	2.0	49	1.6	**50/1***	112BL 2
1430	2.0	49	0.9	**40/1***	112BL 2
1362	2.1	51	3.1	**60/1**	112BL 2
1300	2.2	53	0.9	**40/1***	112BL 2
1204	2.4	58	2.9	**60/1**	132SL 2
1144	2.5	61	1.3	**50/1***	112BL 2
1108	1.3	63	2.1	**60/1**	132M 4
1059	2.7	66	2.6	**60/1**	112BL 2
1021	2.8	68	1.2	**50/1***	112BL 2
986	2.9	70	2.4	**60/1**	112BL 2
923	3.1	75	1.2	**50/1***	112BL 2
800	1.8	87	3.2	**80/1**	132M 4
800	1.8	87	1.7	**60/1**	132M 4
794	3.6	87	1.0	**50/1***	112BL 2
733	3.9	95	0.9	**50/1***	112BL 2
720	2.0	96	3.2	**80/1**	132M 4
686	2.1	101	1.6	**60/1**	132M 4
600	2.4	116	2.8	**80/1**	132M 4
600	2.4	116	1.5	**60/1**	132M 4
533	2.7	130	2.5	**80/1**	132M 4

1.7 Prestazioni motoriduttori

1.7 Gearmotors performances

1.7 Характеристики мотор-редуктора

7.5 kW

n_1= 2890 min^{-1} — 132SL 2
n_1= 2860 min^{-1} — 112BL 2
n_1= 1440 min^{-1} — 132M 4

n_2 min^{-1}	ir	T2 Nm	FS'	AM AC	
533	2.7	130	1.3	**60/1**	132M 4
497	2.9	140	2.4	**80/1**	132M 4
497	2.9	140	1.2	**60/1**	132M 4
436	3.3	159	2.1	**80/1**	132M 4
424	3.4	164	1.0	**60/1**	132M 4
400	3.6	174	1.9	**80/1**	132M 4
400	3.6	174	1.0	**60/1**	132M 4
369	3.9	188	3.2	**100/1**	132M 4
362	7.9	188	1.5	**60/2**	112BL 2
321	8.9	212	1.4	**60/2**	112BL 2
300	4.8	232	1.4	**80/1**	132M 4
272	5.3	256	1.3	**80/1**	132M 4
267	5.4	261	2.0	**100/1**	132M 4
253	11.3	269	1.1	**60/2**	112BL 2
248	5.8	280	1.2	**80/1**	132M 4
244	5.9	285	1.9	**100/1**	132M 4
231	12.4	295	1.1	**60/2**	112BL 2
225	6.4	309	1.1	**80/1**	132M 4
209	6.9	333	1.4	**100/1**	132M 4
200	14.3	340	1.0	**60/2**	112BL 2
192	7.5	362	1.3	**100/1**	132M 4
185	7.8	369	1.9	**80/2**	132M 4
182	7.9	373	0.9	**60/2**	132M 4
166	8.7	411	1.8	**80/2**	132M 4
162	8.9	421	3.6	**100/2**	132M 4
162	8.9	421	0.8	**60/2**	132M 4
145	9.9	468	3.3	**100/2**	132M 4
144	10.0	473	1.6	**80/2**	132M 4
130	11.1	525	3.0	**100/2**	132M 4
130	11.1	525	1.5	**80/2**	132M 4
119	12.1	572	2.8	**100/2**	132M 4
116	12.4	586	1.3	**80/2**	132M 4
102	14.1	666	2.5	**100/2**	132M 4
101	14.2	671	1.2	**80/2**	132M 4
95	15.2	718	1.2	**80/2**	132M 4
91	15.9	751	2.3	**100/2**	132M 4
82	17.6	832	2.1	**100/2**	132M 4
80	18.1	855	1.0	**80/2**	132M 4
75	19.3	912	3.3	**120/2**	132M 4
74	19.4	917	1.0	**80/2**	132M 4
72	19.9	940	1.9	**100/2**	132M 4
69	21.0	992	3.0	**120/2**	132M 4
65	22.1	1044	2.9	**120/2**	132M 4
65	22.2	1049	1.8	**100/2**	132M 4
63	22.7	1073	0.8	**80/2**	132M 4
62	23.1	1092	2.7	**120/2**	132M 4
60	24.0	1134	2.6	**120/2**	132M 4
60	24.2	1144	1.7	**100/2**	132M 4
53	27.0	1276	2.4	**120/2**	132M 4
51	28.3	1337	1.4	**100/2**	132M 4
50	28.9	1366	2.2	**120/2**	132M 4
49	29.1	1346	1.5	**100/3**	132M 4
49	29.6	1399	2.1	**120/2**	132M 4
48	30.3	1432	1.3	**100/2**	132M 4

7.5 kW

n_1= 2890 min^{-1} — 132SL 2
n_1= 2860 min^{-1} — 112BL 2
n_1= 1440 min^{-1} — 132M 4

n_2 min^{-1}	ir	T2 Nm	FS'	AM AC	
44	32.5	1503	1.3	**100/3**	132M 4
43	33.7	1592	1.9	**120/2**	132M 4
41	35.3	1668	1.2	**100/2**	132M 4
40	36.4	1684	1.2	**100/3**	132M 4
39	37.0	1748	1.7	**120/2**	132M 4
38	38.3	1810	1.1	**100/2**	132M 4
35	40.6	1878	1.1	**100/3**	132M 4
35	40.7	1883	1.8	**120/3**	132M 4
32	45.2	2091	0.9	**100/3**	132M 4
32	45.7	2114	1.6	**120/3**	132M 4
28	50.9	2355	1.4	**120/3**	132M 4
27	52.8	2442	0.8	**100/3**	132M 4
25	57.1	2641	1.2	**120/3**	132M 4
23	62.2	2877	1.1	**120/3**	132M 4
19.8	72.6	3358	1.0	**120/3**	132M 4
18.5	77.7	3594	0.9	**120/3**	132M 4
17.5	82.2	3802	0.9	**120/3**	132M 4

9.2 kW

n_1= 1450 min^{-1} — 132ML 4

n_2 min^{-1}	ir	T2 Nm	FS'	AM AC	
1115	1.3	76	1.7	**60/1***	132ML 4
1036	1.4	82	3.3	**80/1**	132ML 4
906	1.6	94	1.5	**60/1***	132ML 4
806	1.8	106	2.6	**80/1**	132ML 4
806	1.8	106	1.4	**60/1***	132ML 4
725	2.0	118	2.6	**80/1**	132ML 4
690	2.1	123	1.3	**60/1***	132ML 4
604	2.4	141	2.3	**80/1**	132ML 4
604	2.4	141	1.2	**60/1***	132ML 4
537	2.7	159	2.1	**80/1**	132ML 4
537	2.7	159	1.1	**60/1***	132ML 4
500	2.9	170	1.9	**80/1**	132ML 4
500	2.9	170	1.0	**60/1***	132ML 4
439	3.3	194	1.7	**80/1**	132ML 4
426	3.4	200	0.9	**60/1***	132ML 4
403	3.6	212	1.6	**80/1**	132ML 4
403	3.6	212	0.8	**60/1***	132ML 4
372	3.9	229	2.6	**100/1**	132ML 4
302	4.8	282	1.2	**80/1**	132ML 4
250	5.8	341	1.0	**80/1**	132ML 4
246	5.9	347	1.5	**100/1**	132ML 4
227	6.4	376	0.9	**80/1**	132ML 4
210	6.9	406	1.2	**100/1**	132ML 4
186	7.8	449	1.6	**80/2**	132ML 4
184	7.9	455	3.2	**100/2**	132ML 4
167	8.7	501	1.5	**80/2**	132ML 4
163	8.9	512	2.9	**100/2**	132ML 4
146	9.9	570	2.7	**100/2**	132ML 4
145	10.0	576	1.3	**80/2**	132ML 4
131	11.1	639	2.5	**100/2**	132ML 4

9.2 kW

n_1= 1450 min^{-1} — 132ML 4

n_2 min^{-1}	ir	T2 Nm	FS'	AM AC	
131	11.1	639	1.2	**80/2**	132ML 4
120	12.1	697	2.3	**100/2**	132ML 4
117	12.4	714	1.1	**80/2**	132ML 4
103	14.1	812	2.1	**100/2**	132ML 4
102	14.2	817	1.0	**80/2**	132ML 4
95	15.2	875	1.0	**80/2**	132ML 4
91	15.9	915	1.9	**100/2**	132ML 4
82	17.6	1013	1.8	**100/2**	132ML 4
82	17.7	1019	2.9	**120/2**	132ML 4
80	18.1	1042	0.8	**80/2**	132ML 4
73	19.9	1146	1.6	**100/2**	132ML 4
65	22.2	1278	1.5	**100/2**	132ML 4
63	23.1	1330	2.3	**120/2**	132ML 4
51	28.3	1629	1.2	**100/2**	132ML 4
50	28.9	1664	1.8	**120/2**	132ML 4
43	33.7	1940	1.5	**120/2**	132ML 4
41	35.3	2032	0.9	**100/2**	132ML 4
36	40.6	2288	0.9	**100/3**	132ML 4
36	40.7	2294	1.4	**120/3**	132ML 4
28	50.9	2868	1.2	**120/3**	132ML 4
23	62.2	3505	0.9	**120/3**	132ML 4

11 kW

n_1= 2940 min^{-1} — 132M 2
n_1= 1455 min^{-1} — 160M 4

n_2 min^{-1}	ir	T2 Nm	FS'	AM AC	
2450	1.2	42	6.3	**80/1**	132M 2
2262	1.3	45	2.9	**60/1***	132M 2
1838	1.6	55	2.5	**60/1***	132M 2
1633	1.8	62	2.3	**60/1***	132M 2
1400	2.1	73	2.2	**60/1***	132M 2
1225	2.4	83	2.0	**60/1***	132M 2
1213	1.2	84	3.1	**80/1**	160M 4
1089	2.7	94	3.5	**80/1**	132M 2
1089	2.7	94	1.8	**60/1***	132M 2
1039	1.4	98	2.8	**80/1**	160M 4
1014	2.9	101	1.7	**60/1***	132M 2
891	3.3	114	2.9	**80/1**	132M 2
865	3.4	118	1.4	**60/1***	132M 2
808	1.8	126	2.2	**80/1**	160M 4
728	2.0	140	2.2	**80/1**	160M 4
626	4.7	163	1.0	**60/1***	132M 2
606	2.4	168	2.0	**80/1**	160M 4
565	5.2	180	0.9	**60/1***	132M 2
539	2.7	189	1.7	**80/1**	160M 4
502	2.9	203	1.6	**80/1**	160M 4
485	3.0	210	2.9	**100/1**	160M 4
441	3.3	231	1.4	**80/1**	160M 4
416	3.5	245	2.4	**100/1**	160M 4
404	3.6	252	1.3	**80/1**	160M 4
373	3.9	273	2.2	**100/1**	160M 4
372	7.9	268	1.1	**60/2***	132M 2

1.7 Prestazioni motoriduttori

1.7 Gearmotors performances

1.7 Характеристики мотор-редуктора

11 kW

n_1= 2940 min^{-1} — 132M 2
n_1= 1455 min^{-1} — 160M 4

n_2 min^{-1}	ir	T2 Nm	FS'	AM AC	
338	8.7	295	2.1	**80/2**	132M 2
330	8.9	302	1.0	**60/2***	132M 2
303	4.8	336	1.0	**80/1**	160M 4
275	5.3	371	0.9	**80/1**	160M 4
269	5.4	378	1.4	**100/1**	160M 4
265	11.1	377	1.7	**80/2**	132M 2
251	5.8	406	0.8	**80/1**	160M 4
247	5.9	413	1.3	**100/1**	160M 4
211	6.9	473	2.9	**100/2**	160M 4
211	6.9	483	1.0	**100/1**	160M 4
194	7.5	514	2.7	**100/2**	160M 4
194	7.5	525	0.9	**100/1**	160M 4
187	7.8	535	1.3	**80/2**	160M 4
184	7.9	542	2.7	**100/2**	160M 4
167	8.7	597	1.2	**80/2**	160M 4
163	8.9	610	2.4	**100/2**	160M 4
147	9.9	679	2.3	**100/2**	160M 4
146	10.0	686	1.1	**80/2**	160M 4
137	10.6	727	3.1	**120/2**	160M 4
131	11.1	761	2.1	**100/2**	160M 4
131	11.1	761	1.0	**80/2**	160M 4
120	12.1	830	1.9	**100/2**	160M 4
117	12.4	851	0.9	**80/2**	160M 4
103	14.1	967	3.1	**120/2**	160M 4
103	14.1	967	1.7	**100/2**	160M 4
102	14.2	974	0.8	**80/2**	160M 4
96	15.2	1043	0.8	**80/2**	160M 4
92	15.9	1091	1.6	**100/2**	160M 4
83	17.6	1207	1.5	**100/2**	160M 4
82	17.7	1214	2.5	**120/2**	160M 4
75	19.3	1324	2.3	**120/2**	160M 4
73	19.9	1365	1.3	**100/2**	160M 4
66	22.1	1516	2.0	**120/2**	160M 4
66	22.2	1523	1.2	**100/2**	160M 4
61	24.0	1646	1.8	**120/2**	160M 4
60	24.2	1660	1.2	**100/2**	160M 4
51	28.3	1941	1.0	**100/2**	160M 4
50	28.9	1982	1.5	**120/2**	160M 4
43	33.7	2311	1.3	**120/2**	160M 4
39	37.0	2538	1.2	**120/2**	160M 4
32	90.7	3014	1.0	120/3	132M 2

15 kW

n_1= 2930 min^{-1} — 160MB 2
n_1= 2900 min^{-1} — 132ML 2
n_1= 1455 min^{-1} — 160L 4

n_2 min^{-1}	ir	T2 Nm	FS'	AM AC	
2442	1.2	57	4.6	**80/1***	160MB 2
2231	1.3	62	2.1	**60/1***	132ML 2
1813	1.6	77	1.8	**60/1***	132ML 2
1611	1.8	86	3.2	**80/1***	132ML 2
1611	1.8	86	1.7	**60/1***	132ML 2
1450	2.0	96	3.2	**80/1***	132ML 2

15 kW

n_1= 2930 min^{-1} — 160MB 2
n_1= 2900 min^{-1} — 132ML 2
n_1= 1455 min^{-1} — 160L 4

n_2 min^{-1}	ir	T2 Nm	FS'	AM AC	
1381	2.1	101	1.6	**60/1***	132ML 2
1213	1.2	115	2.3	**80/1***	160L 4
1208	2.4	115	1.5	**60/1***	132ML 2
1074	2.7	129	1.3	**60/1***	132ML 2
1039	1.4	134	2.0	**80/1***	160L 4
879	3.3	158	2.1	**80/1***	132ML 2
853	3.4	163	1.0	**60/1***	132ML 2
808	1.8	172	1.6	**80/1***	160L 4
806	3.6	172	1.0	**60/1***	132ML 2
766	1.9	181	2.7	**100/1**	160L 4
728	2.0	191	1.6	**80/1***	160L 4
661	2.2	210	2.9	**100/1**	160L 4
606	2.4	229	1.4	**80/1***	160L 4
539	2.7	258	1.3	**80/1***	160L 4
502	2.9	277	1.2	**80/1***	160L 4
485	3.0	287	2.1	**100/1**	160L 4
441	3.3	315	1.0	**80/1***	160L 4
416	3.5	334	1.8	**100/1**	160L 4
404	3.6	344	1.0	**80/1***	160L 4
393	3.7	346	3.5	**100/2**	160L 4
373	3.9	372	1.6	**100/1**	160L 4
372	7.8	366	1.6	**80/2***	132ML 2
333	8.7	408	1.5	**80/2***	132ML 2
297	4.9	458	2.8	**100/2**	160L 4
290	10.0	469	1.3	**80/2***	132ML 2
269	5.4	516	1.0	**100/1**	160L 4
261	11.1	521	2.5	**100/2**	132ML 2
261	11.1	521	1.2	**80/2***	132ML 2
247	5.9	563	0.9	**100/1**	160L 4
239	6.1	571	3.5	**120/2**	160L 4
234	12.4	582	1.1	**80/2***	132ML 2
211	6.9	645	2.1	**100/2**	160L 4
194	7.5	701	2.0	**100/2**	160L 4
189	7.7	720	3.1	**120/2**	160L 4
187	7.8	730	1.0	**80/2***	160L 4
171	8.5	795	3.1	**120/2**	160L 4
167	8.7	814	0.9	**80/2***	160L 4
163	8.9	832	1.8	**100/2**	160L 4
147	9.9	926	1.7	**100/2**	160L 4
137	10.6	991	2.3	**120/2**	160L 4
131	11.1	1038	1.5	**100/2**	160L 4
127	11.5	1076	2.8	**120/2**	160L 4
120	12.1	1132	1.4	**100/2**	160L 4
103	14.1	1319	2.3	**120/2**	160L 4
103	14.1	1319	1.3	**100/2**	160L 4
92	15.9	1487	1.2	**100/2**	160L 4
83	17.6	1646	1.1	**100/2**	160L 4
82	17.7	1655	1.8	**120/2**	160L 4
75	19.3	1805	1.7	**120/2**	160L 4
73	19.9	1861	1.0	**100/2**	160L 4
69	21.0	1964	1.5	**120/2**	160L 4
66	22.1	2067	1.5	**120/2**	160L 4
66	22.2	2076	0.9	**100/2**	160L 4
63	23.1	2161	1.4	**120/2**	160L 4

15 kW

n_1= 2930 min^{-1} — 160MB 2
n_1= 2900 min^{-1} — 132ML 2
n_1= 1455 min^{-1} — 160L 4

n_2 min^{-1}	ir	T2 Nm	FS'	AM AC	
61	24.0	2245	1.3	**120/2**	160L 4
60	24.2	2263	0.9	**100/2**	160L 4
54	27.0	2525	1.2	**120/2**	160L 4
50	28.9	2703	1.1	**120/2**	160L 4
49	29.6	2769	1.1	**120/2**	160L 4
43	33.7	3152	1.0	**120/2**	160L 4
39	37.0	3461	0.9	**120/2**	160L 4

18.5 kW

n_1= 2910 min^{-1} — 160L 2
n_1= 1460 min^{-1} — 180M 4
n_1= 970 min^{-1} — 200L 6

n_2 min^{-1}	ir	T2 Nm	FS'	AM AC	
2425	1.2	71	3.7	**80/1***	160L 2
2079	1.4	82	3.3	**80/1***	160L 2
1617	1.8	106	2.6	**80/1***	160L 2
1455	2.0	118	2.6	**80/1***	160L 2
1213	2.4	141	2.3	**80/1***	160L 2
1123	1.3	153	3.1	**100/1**	180M 4
882	3.3	194	1.7	**80/1***	160L 2
808	3.6	212	1.6	**80/1***	160L 2
768	1.9	223	2.2	**100/1**	180M 4
664	2.2	258	2.3	**100/1**	180M 4
606	4.8	283	1.2	**80/1***	160L 2
549	5.3	312	1.1	**80/1***	160L 2
539	5.4	318	1.7	**100/1**	160L 2
502	5.8	342	1.0	**80/1***	160L 2
487	3.0	352	1.7	**100/1**	180M 4
455	6.4	377	0.9	**80/1***	160L 2
417	3.5	411	1.5	**100/1**	180M 4
395	3.7	425	2.9	**100/2**	180M 4
374	3.9	458	1.3	**100/1**	180M 4
373	7.8	450	1.3	**80/2***	160L 2
334	8.7	502	1.2	**80/2***	160L 2
298	4.9	563	2.3	**100/2**	180M 4
291	10.0	577	1.1	**80/2***	160L 2
281	5.2	598	3.0	**120/2**	180M 4
270	5.4	634	0.8	**100/1**	180M 4
262	11.1	640	1.0	**80/2***	160L 2
239	6.1	701	2.9	**120/2**	180M 4
212	6.9	793	1.7	**100/2**	180M 4
195	7.5	862	1.6	**100/2**	180M 4
190	7.7	885	2.5	**120/2**	180M 4
185	7.9	908	1.6	**100/2**	180M 4
172	8.5	977	2.6	**120/2**	180M 4
164	8.9	1023	1.5	**100/2**	180M 4
147	9.9	1138	1.3	**100/2**	180M 4
138	10.6	1219	1.9	**120/2**	180M 4
132	11.1	1276	1.2	**100/2**	180M 4
127	11.5	1322	2.3	**120/2**	180M 4
121	12.1	1391	1.2	**100/2**	180M 4
104	14.1	1621	1.9	**120/2**	180M 4
104	14.1	1621	1.0	**100/2**	180M 4

1.7 Prestazioni motoriduttori

1.7 Gearmotors performances

1.7 Характеристики мотор-редуктора

18.5 kW

n_1= 2910 min^{-1} 160L 2
n_1= 1460 min^{-1} 180M 4
n_1= 970 min^{-1} 200L 6

n_2 min^{-1}	ir	T2 Nm	FS'	AM AC	
92	15.9	1828	0.9	**100/2**	180M 4
83	17.6	2023	0.9	**100/2**	180M 4
82	17.7	2035	1.5	**120/2**	180M 4
70	21.0	2414	1.2	**120/2**	180M 4
61	24.0	2759	1.1	**120/2**	180M 4
51	28.9	3322	0.9	**120/2**	180M 4
46	21.0	3634	0.8	**120/2**	200L 6

22 kW

n_1= 2925 min^{-1} 180M 2
n_1= 1460 min^{-1} 180L 4
n_1= 975 min^{-1} 200L 6

n_2 min^{-1}	ir	T2 Nm	FS'	AM AC	
2250	1.3	91	5.3	**100/1***	180M 2
1539	1.9	132	3.7	**100/1***	180M 2
1330	2.2	153	3.9	**100/1***	180M 2
1219	2.4	164	5.6	**100/2**	180M 2
1123	1.3	181	2.6	**100/1***	180L 4
1083	2.7	184	5.2	**100/2**	180M 2
975	3.0	209	2.9	**100/1***	180M 2
836	3.5	244	2.5	**100/1***	180M 2
768	1.9	265	1.8	**100/1***	180L 4
664	2.2	307	2.0	**100/1***	180L 4
608	2.4	328	3.3	**100/2**	180L 4
541	2.7	369	3.1	**100/2**	180L 4
487	3.0	419	1.4	**100/1***	180L 4
417	3.5	489	1.2	**100/1***	180L 4
395	3.7	506	2.4	**100/2**	180L 4
374	3.9	533	3.2	**120/2**	180L 4
374	3.9	544	1.1	**100/1***	180L 4
298	4.9	670	1.9	**100/2**	180L 4
281	5.2	711	2.5	**120/2**	180L 4
239	6.1	834	2.4	**120/2**	180L 4
212	6.9	943	1.4	**100/2**	180L 4
195	7.5	1025	1.4	**100/2**	180L 4
190	7.7	1053	2.1	**120/2**	180L 4
185	7.9	1080	1.3	**100/2**	180L 4
172	8.5	1162	2.2	**120/2**	180L 4
164	8.9	1217	1.2	**100/2**	180L 4
147	9.9	1353	1.1	**100/2**	180L 4
138	10.6	1449	1.6	**120/2**	180L 4
132	11.1	1517	1.0	**100/2**	180L 4
127	11.5	1572	1.9	**120/2**	180L 4
121	12.1	1654	1.0	**100/2**	180L 4
104	14.1	1928	1.6	**120/2**	180L 4
104	14.1	1928	0.9	**100/2**	180L 4
92	10.6	2170	1.4	**120/2**	200L 6
82	17.7	2420	1.2	**120/2**	180L 4
76	19.3	2638	1.1	**120/2**	180L 4
70	21.0	2871	1.0	**120/2**	180L 4
66	22.1	3021	1.0	**120/2**	180L 4
61	24.0	3281	0.9	**120/2**	180L 4
54	27.0	3691	0.8	**120/2**	180L 4

30 kW

n_1= 2945 min^{-1} 200L 2
n_1= 1465 min^{-1} 200L 4

n_2 min^{-1}	ir	T2 Nm	FS'	AM AC	
2265	1.3	123	3.9	**100/1***	200L 2
1550	1.9	179	2.7	**100/1***	200L 2
1339	2.2	208	2.9	**100/1***	200L 2
1227	2.4	222	4.1	**100/2***	200L 2
1127	1.3	247	1.9	**100/1***	200L 4
1091	2.7	250	3.8	**100/2***	200L 2
982	3.0	283	2.1	**100/1***	200L 2
841	3.5	330	1.8	**100/1***	200L 2
796	3.7	342	3.0	**100/2***	200L 2
771	1.9	360	1.4	**100/1***	200L 4
666	2.2	417	1.4	**100/1***	200L 4
610	2.4	446	2.4	**100/2***	200L 4
543	2.7	502	2.3	**100/2***	200L 4
523	2.8	520	3.3	**120/2**	200L 4
488	3.0	569	1.1	**100/1***	200L 4
419	3.5	664	0.9	**100/1***	200L 4
396	3.7	687	1.8	**100/2***	200L 4
376	3.9	725	2.3	**120/2**	200L 4
376	3.9	740	0.8	**100/1***	200L 4
299	4.9	910	1.4	**100/2***	200L 4
282	5.2	966	1.9	**120/2**	200L 4
240	6.1	1133	1.8	**120/2**	200L 4
212	6.9	1282	1.1	**100/2***	200L 4
195	7.5	1393	1.0	**100/2***	200L 4
190	7.7	1431	1.5	**120/2**	200L 4
185	7.9	1468	1.0	**100/2***	200L 4
172	8.5	1579	1.6	**120/2**	200L 4
165	8.9	1653	0.9	**100/2***	200L 4
148	9.9	1839	0.8	**100/2***	200L 4
138	10.6	1969	1.2	**120/2**	200L 4
127	11.5	2137	1.4	**120/2**	200L 4
104	14.1	2620	1.1	**120/2**	200L 4
83	17.7	3288	0.9	**120/2**	200L 4

37 kW

n_1= 2950 min^{-1} 200L 2
n_1= 1475 min^{-1} 225S 4

n_2 min^{-1}	ir	T2 Nm	FS'	AM AC	
2269	1.3	151	3.2	**100/1***	200L 2
1553	1.9	221	2.2	**100/1***	200L 2
1341	2.2	256	2.3	**100/1***	200L 2
1229	2.4	273	3.3	**100/2***	200L 2
1093	2.7	307	3.1	**100/2***	200L 2
983	3.0	349	1.7	**100/1***	200L 2
843	3.5	407	1.5	**100/1***	200L 2
797	3.7	421	2.4	**100/2***	200L 2
756	3.9	453	1.3	**100/1***	200L 2
602	4.9	558	1.9	**100/2***	200L 2
567	5.2	592	2.5	**120/2***	200L 2
546	5.4	627	0.8	**100/1***	200L 2
527	2.8	637	2.7	**120/2***	225S 4
484	6.1	694	2.3	**120/2***	200L 2

37 kW

n_1= 2950 min^{-1} 200L 2
n_1= 1475 min^{-1} 225S 4

n_2 min^{-1}	ir	T2 Nm	FS'	AM AC	
428	6.9	785	1.4	**100/2***	200L 2
393	7.5	853	1.4	**100/2***	200L 2
378	3.9	888	1.9	**120/2***	225S 4
331	8.9	1013	1.2	**100/2***	200L 2
284	5.2	1183	1.5	**120/2***	225S 4
244	12.1	1377	1.0	**100/2***	200L 2
242	6.1	1388	1.4	**120/2***	225S 4
192	7.7	1752	1.3	**120/2***	225S 4
174	8.5	1934	1.3	**120/2***	225S 4
139	10.6	2412	0.9	**120/2***	225S 4
128	11.5	2617	1.1	**120/2***	225S 4
105	14.1	3209	0.9	**120/2***	225S 4

45 kW

n_1= 2945 min^{-1} 225M 2
n_1= 1475 min^{-1} 225M 4

n_2 min^{-1}	ir	T2 Nm	FS'	AM AC	
1052	2.8	388	3.6	**120/2***	225M 2
755	3.9	541	2.6	**120/2***	225M 2
566	5.2	721	2.0	**120/2***	225M 2
527	2.8	775	2.2	**120/2***	225M 4
483	6.1	846	1.9	**120/2***	225M 2
382	7.7	1067	1.7	**120/2***	225M 2
378	3.9	1079	1.6	**120/2***	225M 4
346	8.5	1178	1.7	**120/2***	225M 2
284	5.2	1439	1.3	**120/2***	225M 4
278	10.6	1469	1.5	**120/2***	225M 2
256	11.5	1594	1.5	**120/2***	225M 2
242	6.1	1688	1.2	**120/2***	225M 4
209	14.1	1955	1.2	**120/2***	225M 2
192	7.7	2131	1.0	**120/2***	225M 4
174	8.5	2353	1.1	**120/2***	225M 4
153	19.3	2676	0.9	**120/2***	225M 2
140	21.0	2911	0.8	**120/2***	225M 2

N.B.
Tutte le potenze indicate si riferiscono alla potenza meccanica dei riduttori.
Per i riduttori contrassegnati con **(*)** è opportuno effettuare la verifica della potenza limite termico secondo le indicazioni riportate nel par. A-1.5.

NOTE.
*The power indicated is based on the mechanical capacities of the gearboxes. For the gearboxes marked with **(*)** it is also necessary to obey the therminal capacity like shown on chapter A-1.5.*

ПРИМЕЧАНИЕ.
Все приведенные значения передаваемых мощностей вычислены на основе механической мощности. Для моделей отмеченных знаком (*) всегда необходимо выполнять проверку по термической мощности (см.раздел A-1.5).

Dimensioni riduttori
Dimensions gearboxes
Размеры редукторов

AM/1 - AR/1 - AC/1

ARP (32)

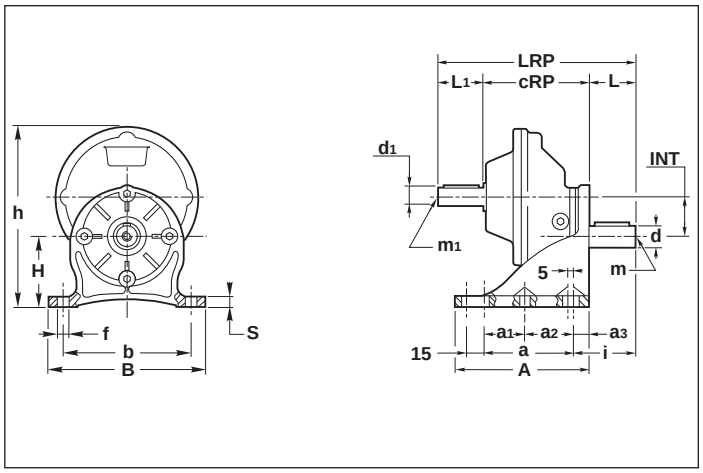

ARP (40 - 100)

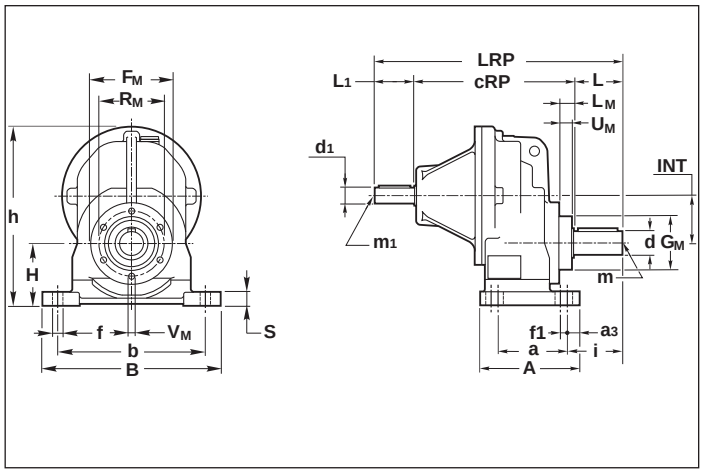

ACP (32)

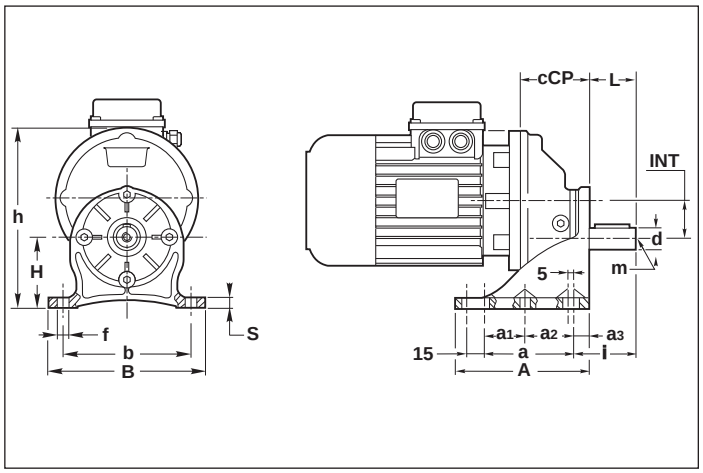

ACP (40 - 100)

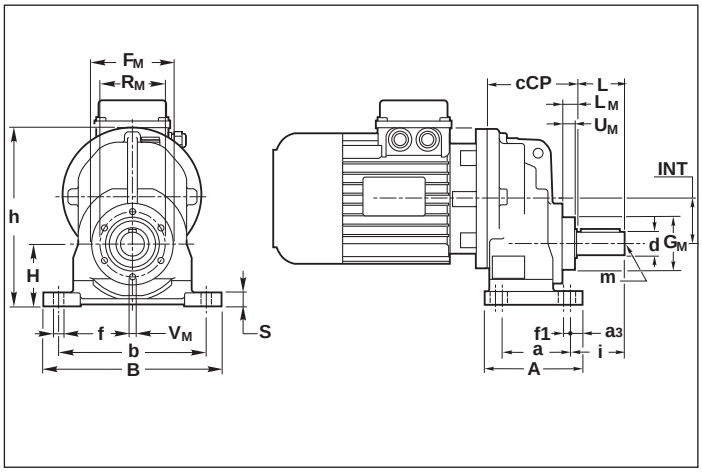

AMP (32)

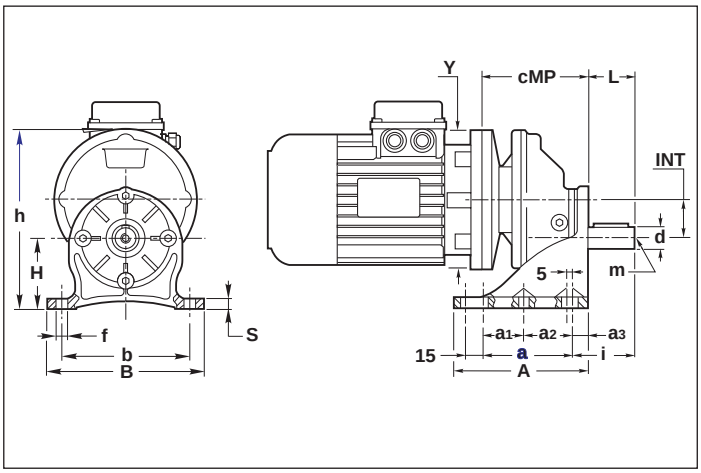

AMP (40 - 100)

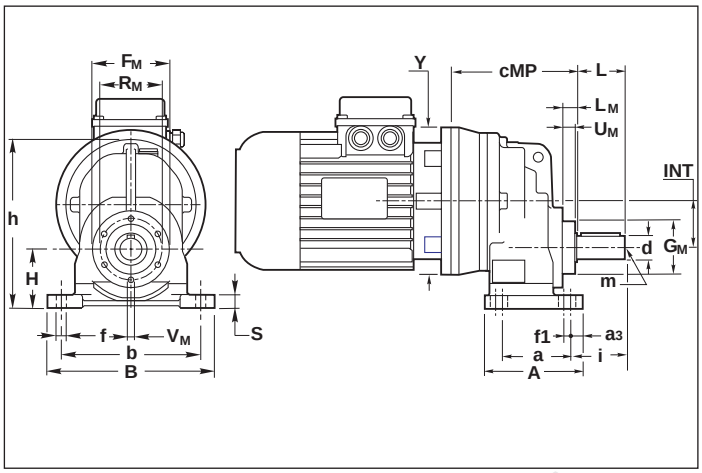

DownLoad 2D/3D

1.8 Dimensioni

1.8 Dimensions

1.8 Размеры

AM AC AR	a	a_1	a_2	a_3	A	b	B	cRP	d h6	d_1 j6	F_M	f	f1	G_M	h	H	i	L	L_1	L_M	LRP	m	m_1	R_M	S	U_M	V_M	INT
32	77	35	42	13	115	110	135	92	19 (14)	16	—	9	5	—	153	60	53 (43)	40 (30)	40	—	172 (162)	M6 (M6)	M6	—	9	—	—	33
40	45	—	—	12	85	105	130	141	19 (20)	16	82	8.5	2	54	162	50	53 (53)	40 (40)	40	14	221 (221)	M6 (M6)	M6	66	12	13	6	42
50	70	—	—	12	100	150	180	161	24 (25)	16	82	11	7	54	181	63	56 (56)	50 (50)	40	14	251 (251)	M8 (M8)	M6	66	14	13	6	48
60	70	—	—	16	120	165	195	193	28 (30)	19	110	11	8.5	74	221	80	67.5 (67.5)	60 (60)	40	17	293 (293)	M10 (M10)	M6	94	15	15	8	61
80	85	—	—	21	135	185	230	218	38 (40)	24	156	14	—	114	276	100	105	80	50	20	348	M10 (M10)	M8	136	20	18	10	76
100	130	—	—	17	173	240	295	284.5	48 (50)	28	156	18	—	114	345	125	129	110	60	20	454	M12 (M12)	M8	136	22	17	10	95

	AMP../1													ACP../1					
IEC	32		40		50		60		80		100			32	40	50	60	80	100
	Y	cMP	Y	cMP	Y	cMP	Y	cMP	Y	cMP	Y	cMP		cCP					
B5	120	92	140	125	140	132	160	159	200	199	250	236		59	86	93	115	142	189
	140	92	160	125	160	132	200	174	250	209.5	300	236							
	160	92	200	145	200	152	250	184	300	230	350	300.5							
	200	102	250	155	250	162	300	208	350	260	400	305.5							
B14	90•	92	120	145	120	152	120	174.5	—	—	—	—							
	105•	92	140	145	140	152	140	174.5	—	—	—	—							
	120	102	160	155	160	162	160	184	—	—	—	—							
	—	—	—	—	—	—	200	208	—	—	—	—							

N.B.
La configurazione standard della flangia attacco motore prevede 4 fori a 45° (esempio x: vedi par. 1.3).
Per le flange contrassegnate con il simbolo (•) i fori per il fissaggio al motore sono disposti in croce (esempio +). Pertanto è opportuno valutare l'ingombro della morsettiera del motore che verrà installato in quanto essa verrà a trovarsi orientata a 45° rispetto agli assi. Per la scelta della posizione della morsettiera rispetto agli assi fare riferimento allo schema seguente (in cui la posizione 5 è quella standard):

Note.
The standard configuration for the holes is 45° to the axles (like an x: see par. 1.3).

For the B14 flanges marked with (•) the holes to fit the motor are on the axles (like a +). Therefore we suggest to check the dimensions of the terminal board of the motor as it will be at 45° to the axles. Please choose the terminal board position refering to the following sketch (in which n° 5 is the standard position):

ВНИМАНИЕ
Стандартное расположение - 4 отверстия под углом в 45° (пример см. в разделе 1.3).

Для фланцев B14,отмеченных (•) посадочные отверстия двигателя находятся под углом. Поэтому необходимо проверить расположение клемной коробки (в этом случае 5 - стандартное положение):

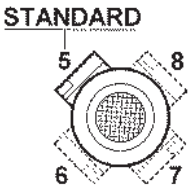

Le dimensioni cMP si riferiscono alle combinazioni albero/flangia B5 e B14, standard.
Per le dimensioni relative a combinazioni albero/flangia arichiesta, contattare il ns. servizio tecnico.

The cMP dimensions refer to the standard B5 and B14 shaft/flange combinations.
As far as the dimensions of shaft/flange combinations on request are concerned, please contact our technical department.

Для исполнений cMP размеры приведены стандартных комбинаций вал/фланец типа B14 и B5.
Для получения информации о нестандартных исполнениях обращайтесь в наш технический отдел.

Dimensioni riduttori
Dimensions gearboxes
Размеры редукторов

AM/1 - AR/1 - AC/1

ARF (32)

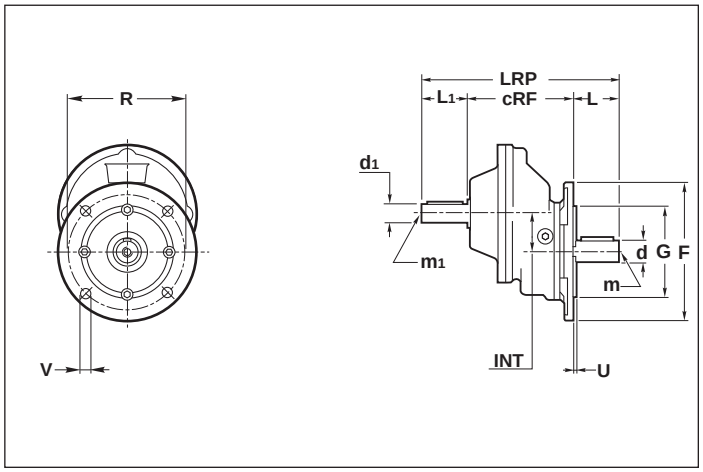

ARF (40 - 100)

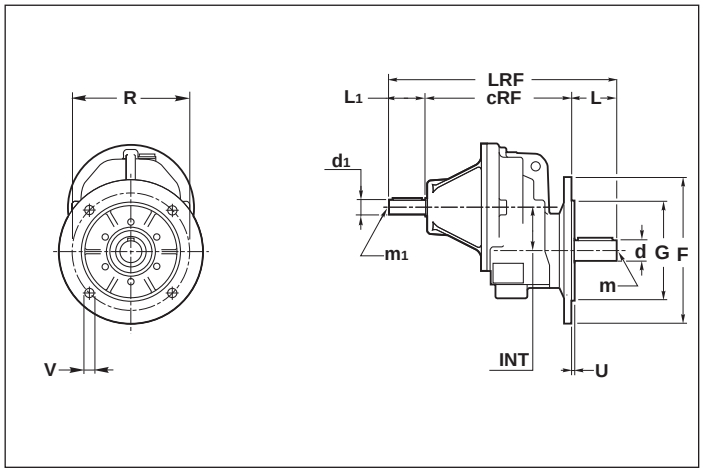

ACF (32)

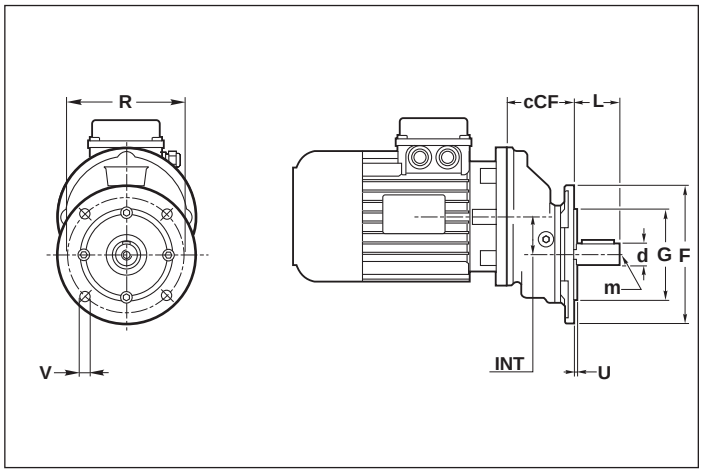

ACF (40 - 100)

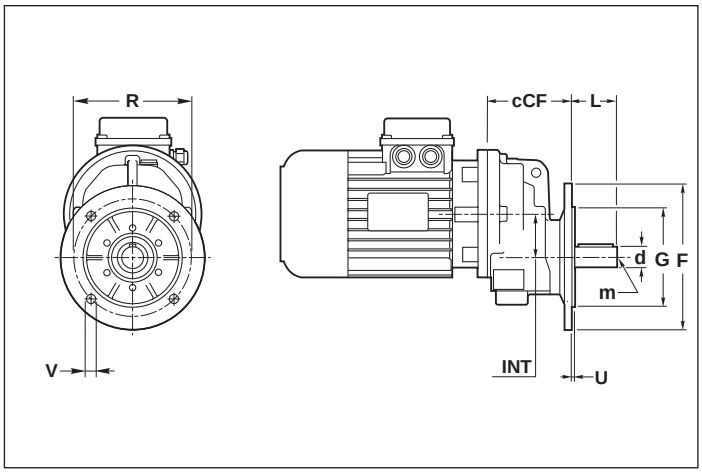

AMF (32)

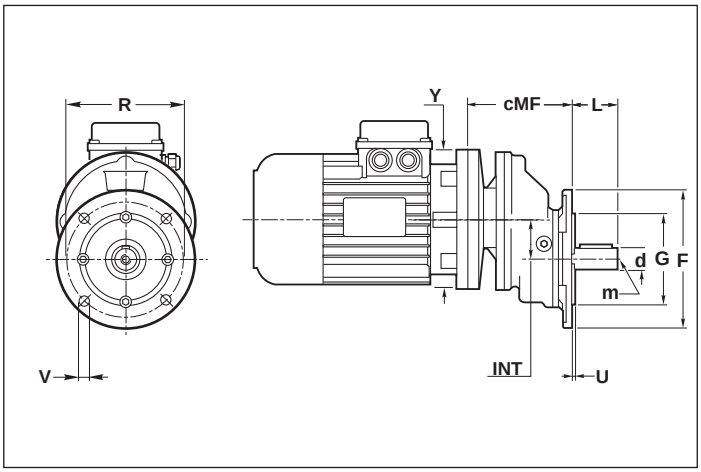

AMF (40 - 100)

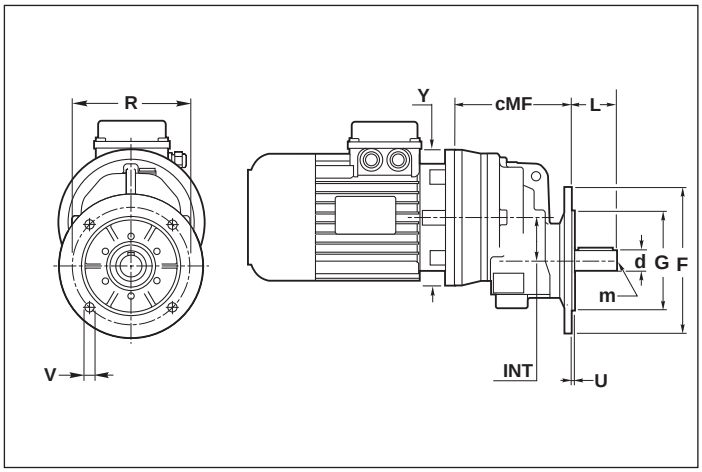

DownLoad 2D/3D

1.8 Dimensioni

1.8 Dimensions

1.8 Размеры

AM AC AR	cRF	d h6	d_1 j6	L	L_1	LRF	m	m_1	INT
32	92	19 (14)	16	30 (40)	40	172 (162)	M6 (M6)	M6	33
40	141	19 (20)	16	40 (40)	40	221 (221)	M6 (M6)	M6	42
50	161	24 (25)	16	50 (50)	40	251 (251)	M8 (M8)	M6	48
60	193	28 (30)	19	60 (60)	40	293 (193)	M10 (M10)	M6	61
80	218	38 (40)	24	80	50	248	M10 (M10)	M8	76
100	284.5	48 (50)	28	110	60	454	M12 (M12)	M8	95

	32			40				50				60			80		100	
	F1	**F2**	**F3**	**F1**	**F2**	**F3**	**F4**	**F1**	**F2**	**F3**	**F4**	**F1**	**F2**	**F3**	**F1**	**F2**	**F1**	**F2**
F	120	140	160	120	140	160	200	120	140	160	200	160	200	250	250	300	250	300
G (g6)	80	95	110	80	95	110	130	80	95	110	130	110	130	180	180	230	180	230
R	100	115	130	100	115	130	165	100	115	130	165	130	165	215	215	265	215	265
V	9	9	10	9	9	10	13	9	9	10	13	10	13	15	15	15	15	15
U	3	3.5	3.5	3	3.5	3.5	3.5	3	3.5	3.5	3.5	3	3.5	3.5	4	4	4	4

	AMF../1											
IEC	32		40		50		60		80		100	
	Y	**cMF**	**Y**	**cMF**	**Y**	**cMF**	**Y**	**cMF**	**Y**	**cMF**	**Y**	**cMF**
B5	120	92	140	125	140	132	160	159	200	199	250	236
	140	92	160	125	160	132	200	174	250	209.5	300	236
	160	92	200	145	200	152	250	184	300	230,5	350	300.5
	200	102	250	155	250	162	300	208	350	260	400	305.5
B14	90•	92	120	145	120	152	120	174.5	—	—	—	—
	105•	92	140	145	140	152	140	174.5	—	—	—	—
	120	102	160	155	160	162	160	184	—	—	—	—
	—	—	—	—	—	—	200	208	—	—	—	—

ACF../1					
32	**40**	**50**	**60**	**80**	**100**
cCF					
59	86	93	115	142	189

N.B.
La configurazione standard della flangia attacco motore prevede 4 fori a 45° (esempio x: vedi par. 1.3).
Per le flange contrassegnate con il simbolo (•) i fori per il fissaggio al motore sono disposti in croce (esempio +). Pertanto è opportuno valutare l'ingombro della morsettiera del motore che verrà installato in quanto essa verrà a trovarsi orientata a 45° rispetto agli assi. Per la scelta della posizione della morsettiera rispetto agli assi fare riferimento allo schema seguente (in cui la posizione 5 è quella standard):

Note.
The standard configuration for the holes is 45° to the axles (like an x: see par. 1.3).

For the B14 flanges marked with (•) the holes to fit the motor are on the axles (like a +). Therefore we suggest to check the dimensions of the terminal board of the motor as it will be at 45° to the axles. Please choose the terminal board position refering to the following sketch (in which n° 5 is the standard position):

ВНИМАНИЕ.
Стандартное расположение - 4 отверстия под углом в 45°(пример см. в разделе 1.3).

Для фланцев B14, отмеченных (•) посадочные отверстия двигателя находятся под углом. Поэтому необходимо проверить расположение клемной коробки (в этом случае 5 - стандартное положение):

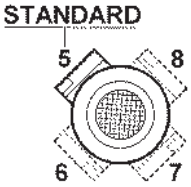

Le dimensioni cMF si riferiscono alle combinazioni albero/flangia B5 e B14, standard.
Per le dimensioni relative a combinazioni albero/flangia arichiesta, contattare il ns. servizio tecnico.

The cMF dimensions refer to the standard B5 and B14 shaft/flange combinations.
As far as the dimensions of shaft/flange combinations on request are concerned, please contact our technical department.

Для исполнений cMF размеры приведены стандартных комбинаций вал/фланец типа B14 и B5.
Для получения информации о нестандартных исполнениях обращайтесь в наш технический отдел.

Dimensioni riduttori
Dimensions gearboxes
Размеры редукторов

AM/2-3 - AR/2-3 - AC/2-3

AM (25)

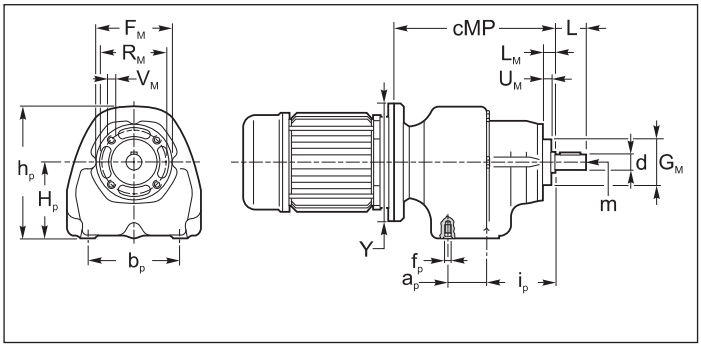

AC (25)

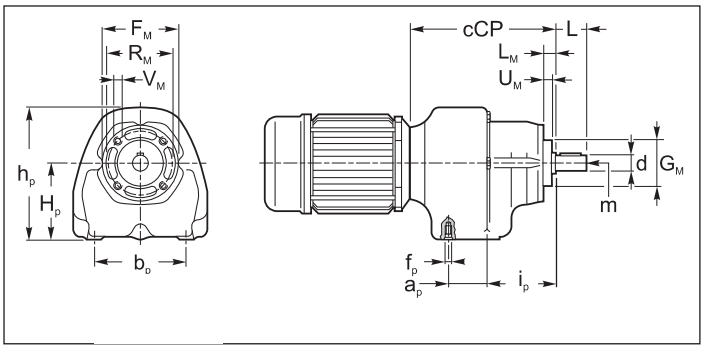

AMP (25)

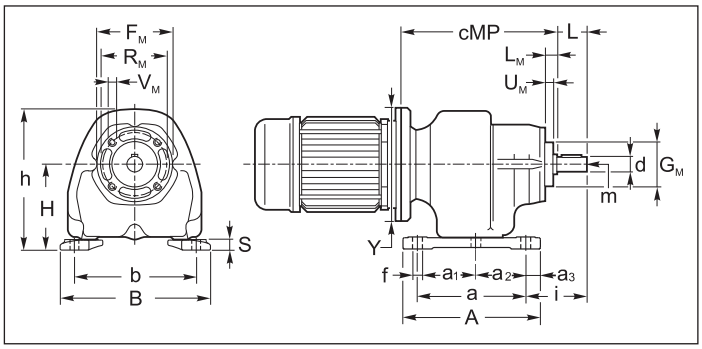

ACP (25)

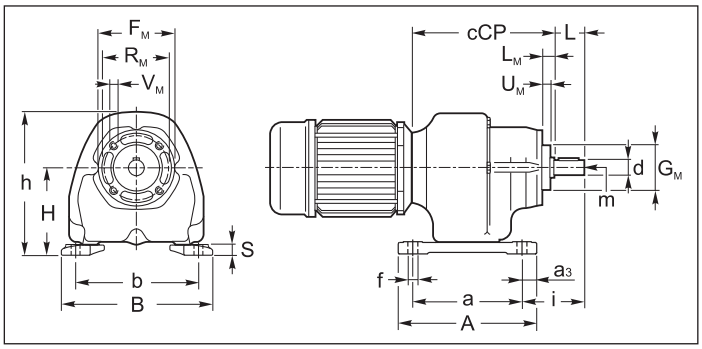

AM (35 - 41- 45)

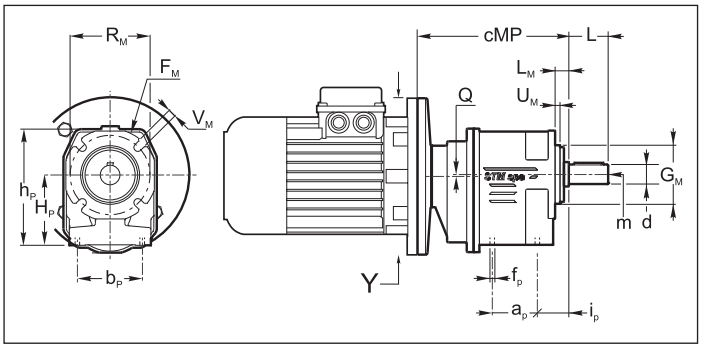

AMP (35 - 45) - AMP1 - AMP2 (41)

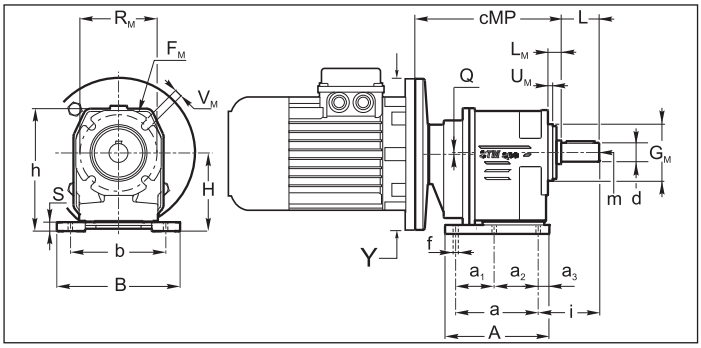

DownLoad 2D/3D

1.8 Dimensioni

1.8 Dimensions

1.8 Размеры

AM AC		a	a_1	a_2	a_3	A	b	B	d j6(A25)-h6	f	h	H	i	L	m	Q	S
25	**P**	71	—	—	9.5	90	90±1	111	11 (14)	6.5	103	63	47 (50)	22 (25)	M5	-	8
35		87 ±2	37 ±2	50 ±2	11.5 ±1	110	110	130	16 (19) (20)	8.5	132	85	48±1 (58) (58)	30 (40) (40)	M6 (M6) (M6)	-	9
41	**P1**	87 ±2	37 ±2	50±2	11.5 ±1	110	110	130	20 (19) (25)	8.5	135	85	59±1 (59) (69)	40 (40) (50)	M6 (M6) (M8)	/2-2 /3-8	9
	P2	85	—	—	10	105	110	130		9.5	130	80	58 (58) (68)				10
45	**P**	107.5±2	47.5±2	60±2	13.5 ±1	135	130	155	25 (24) (30)	11	154	100	69±1 (69) (79)	50 (50) (60)	M8 (M8) (M10)	/2-3 /3-9.5	11

	a_p	b_p	f_p	i_p	h_p	H_p	F_M	G_M(g6)	L_M	R_M	V_M	U_M
25	23	66	M6	49	95	55	55	33	9	46	M6	6
35	50	55	M8	20.5	122	75	95	60	11	80	8	5
41	50	67	M8	20.5	122	72	95	60	11	80	8	5
45	60	75	M8	22.5	142	88	111	70	12	85	8	5

	IEC	25		35		41		45			25	35	41	45
		Y	cMP	Y	cMP	Y	cMP	Y	cMP		cCP			
AMP../2	**B5**	120	116	—	—	140	151.5	160	171.5		93.5	—	—	—
		140	116	140	126.5	160	151.5	200 (IEC 80)	171.5					
				160	126.5	200	160	200 (IEC 90)	182.0					
				200	136.0	—	—	250	184.0					
	B14	80•	116	90•	126.5	90•	151.5	105•	171.5					
		90	116	105	126.5	105•	151.5	120	171.5					
				120	136.0	120	160	140	182.0					
						140	160	160	184.0					
AMP../3	**B5**	120	116	120	144.0	140	168	160	188					
		140	116	140	144.0	160	168	200	188					
				—	—									
				—	—									
	B14	80•	116	80•	144.0	90	168	105	188					
		90	116	90	144.0	105	168	120	188					
				—	—									

N.B.
La configurazione standard della flangia attacco motore prevede 4 fori a 45° (esempio x: vedi par. 1.3).
Per le flange contrassegnate con il simbolo (•) i fori per il fissaggio al motore sono disposti in croce (esempio +). Pertanto è opportuno valutare l'ingombro della morsettiera del motore che verrà installato in quanto essa verrà a trovarsi orientata a 45° rispetto agli assi. Per la scelta della posizione della morsettiera rispetto agli assi fare riferimento allo schema seguente (in cui la posizione 5 è quella standard):

Le dimensioni cMP si riferiscono alle combinazioni albero/flangia B5 e B14, standard.
Per le dimensioni relative a combinazioni albero/flangia arichiesta, contattare il ns. servizio tecnico.

+Note.
The standard configuration for the holes is 45° to the axles (like an x: see par. 1.3).

For the B14 flanges marked with (•) the holes to fit the motor are on the axles (like a +). Therefore we suggest to check the dimensions of the terminal board of the motor as it will be at 45° to the axles. Please choose the terminal board position refering to the following sketch (in which n° 5 is the standard position):

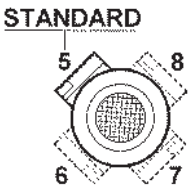

The cMP dimensions refer to the standard B5 and B14 shaft/flange combinations.
As far as the dimensions of shaft/flange combinations on request are concerned, please contact our technical department.

ВНИМАНИЕ.
Стандартное расположение - 4 отверстия под углом в 45°(пример см. в разделе 1.3).

Для фланцев B14, отмеченных (•) посадочные отверстия двигателя находятся под углом. Поэтому необходимо проверить расположение клемной коробки (в этом случае 5 - стандартное положение):

Для исполнений cMP размеры приведены стандартных комбинаций вал/фланец типа B14 и B5.
Для получения информации о нестандартных исполнениях обращайтесь в наш технический отдел.

Dimensioni riduttori
Dimensions gearboxes
Размеры редуктора

AM/2-3 - AR/2-3 - AC/2-3

AMF (25)

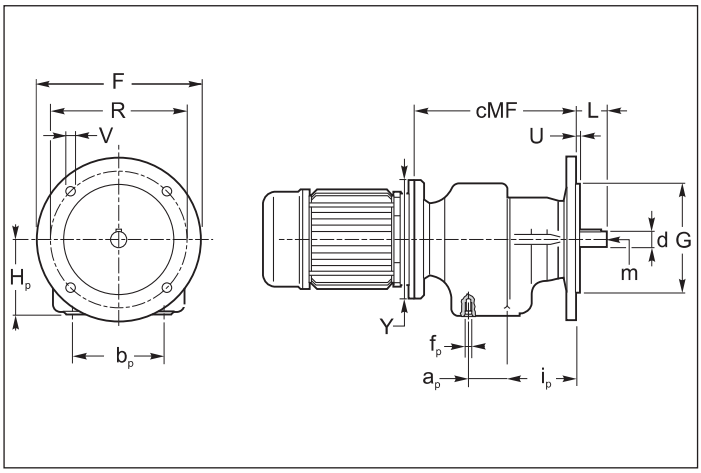

ACF (25)

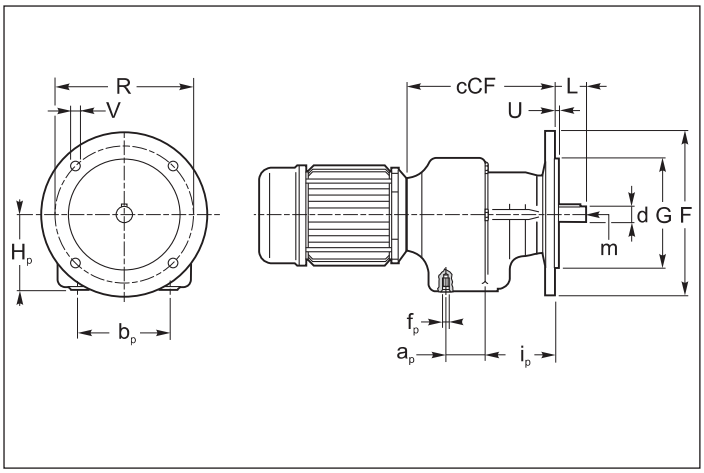

AMF (35 - 41 - 45)

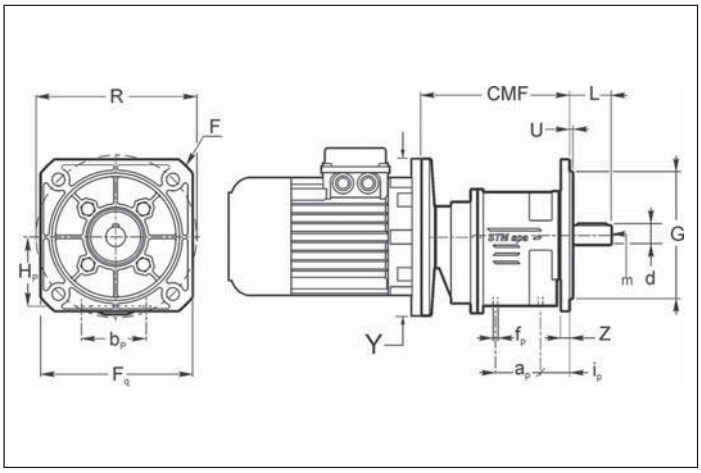

DownLoad 2D/3D

1.8 Dimensioni

1.8 Dimensions

1.8 Размеры

AM AC	ap	bp	fp	ip	Hp	d j6(A25)-h6	f	L	m	Q	S
25	23	66	M6	49	55	11 (14)	6.5	22 (25)	M5	-	8
35	50	55	M8	20.5	75	16 (19) (20)	8.5	30 (40) (40)	M6 (M6) (M6)	-	9
41	50	67	M8	20.5	72	20 (19) (25)	9.5	40 (40) (50)	M6 (M6) (M8)	/2-2 /3-8	10
45	60	75	M8	22.5	88	25 (24) (30)	11	50 (50) (60)	M8 (M8) (M10)	/2-3 /3-9.5	11

B

	AMF - ACF									
	25		35			41			45	
	F1	F2	F1	F2	F3	F1	F2	F3	F1	F2
F	105	120	140	160	200	140	160	200	160	200
F_Q	—	—	110	120	150	110	120	150	120	160
G(g6)	70	80	95	110	130	95	110	130	110	130
R	85	100	115	130	165	115	130	165	130	165
V	7	7	9	9	13	9	9	13	9	13
U	3	3	3.5	3.5	3.5	3.5	3.5	3.5	3.5	3.5

	IEC	25		35		41		45		25	35	41	45
		Y	cMF	Y	cMF	Y	cMF	Y	cMF	cCP			
AMF../2	**B5**	120	116	—	—	140	151.5	160	171.5	93.5	—	—	—
		140	116	140	126.5	160	151.5	200 (IEC 80)	171.5				
				160	126.5	200	160	200 (IEC 90)	182.0				
				200	136.0	—	—	250	184.0				
	B14	80•	116	90•	126.5	90•	151.5	105•	171.5				
		90	116	105	126.5	105•	151.5	120	171.5				
				120	136.0	120	160	140	182.0				
						140	160	160	184.0				
AMF../3	**B5**	120	116	120	144.0	140	168	160	188.0				
		140	116	140	144.0	160	168	200	188.0				
				—	—								
				—	—								
	B14	80•	116	80•	144.0	90	168	105	188.0				
		90	116	90	144.0	105	168	120	188.0				
				—	—								

N.B.
La configurazione standard della flangia attacco motore prevede 4 fori a 45° (esempio x: vedi par. 1.3).
Per le flange contrassegnate con il simbolo (•) i fori per il fissaggio al motore sono disposti in croce (esempio +). Pertanto è opportuno valutare l'ingombro della morsettiera del motore che verrà installato in quanto essa verrà a trovarsi orientata a 45° rispetto agli assi. Per la scelta della posizione della morsettiera rispetto agli assi fare riferimento allo schema seguente (in cui la posizione 5 è quella standard):

NOTE:
The standard configuration for the holes is 45° to the axles (like an x: see par. 1.3).
For the B14 flanges marked with (•) the holes to fit the motor are on the axles (like a +). Therefore we suggest to check the dimensions of the terminal board of the motor as it will be at 45° to the axles. Please choose the terminal board position refering to the following sketch (in which n° 5 is the standard position):

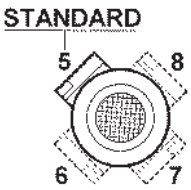

ВНИМАНИЕ.
Стандартное расположение - 4 отверстия под углом в 45°(пример см. в разделе 1.3).

Для фланцев B14, отмеченных (•) посадочные отверстия двигателя находятся под углом. Поэтому необходимо проверить расположение клемной коробки (в этом случае 5 - стандартное положение):

Le dimensioni cMF si riferiscono alle combinazioni albero/flangia B5 e B14, standard.
Per le dimensioni relative a combinazioni albero/flangia arichiesta, contattare il ns. servizio tecnico.

The cMF dimensions refer to the standard B5 and B14 shaft/flange combinations.
As far as the dimensions of shaft/flange combinations on request are concerned, please contact our technical department.

Для исполнений cMP размеры приведены стандартных комбинаций вал/фланец типа B14 и B5.
Для получения информации о нестандартных исполнениях обращайтесь в наш технический отдел.

Dimensioni riduttori
Dimensions gearboxes
Размеры редукторов

AM/2-3 - AR/2-3 - AC/2-3

AMP/F.. (25)

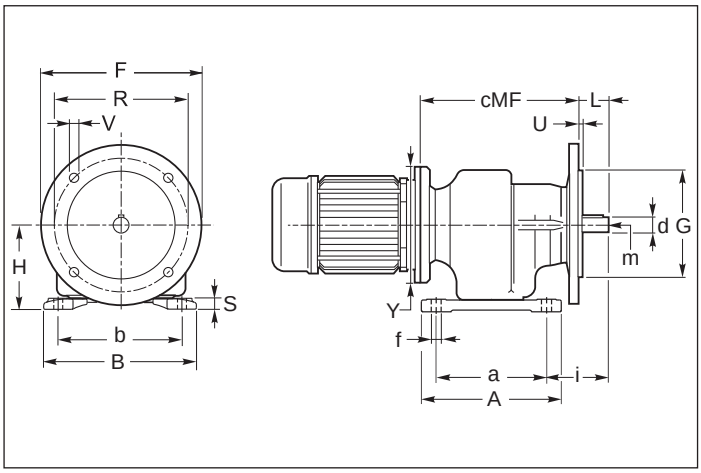

ACP/F.. (25)

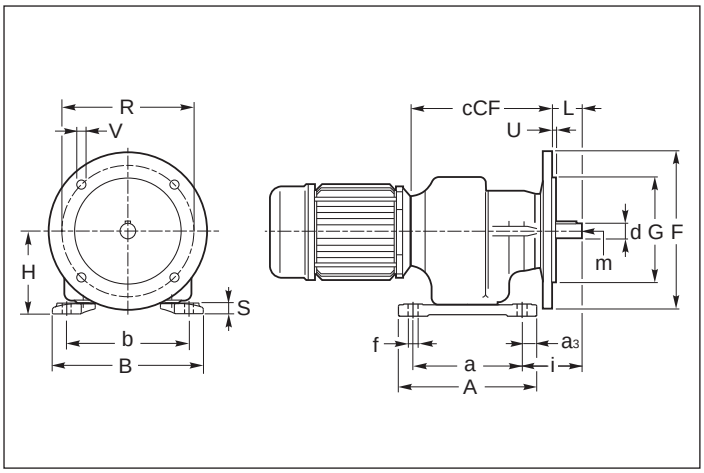

AMP/F. (35-45)
AMP1/F.-AMP2/F. (41)

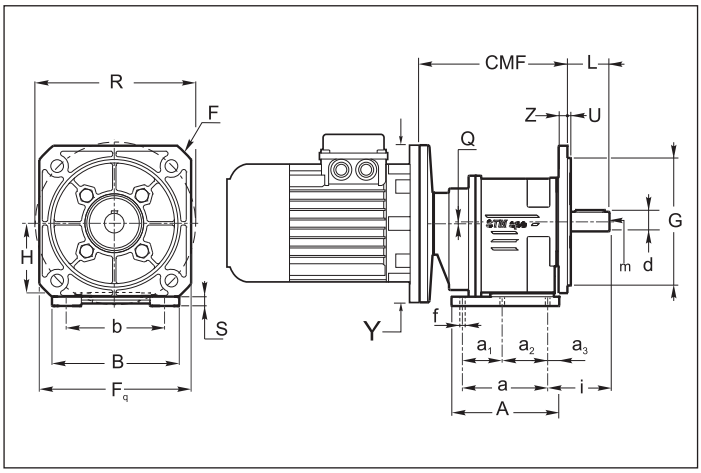

DownLoad 2D/3D

1.8 Dimensioni

1.8 Dimensions

1.8 Размеры

AM AC		a	a_1	a_2	a_3	A	b	B	d j6(A25)-h6	f	h	H	i	L	m	Q	S
25	**P**	71	—	—	9.5	90	90±1	111	11 (14)	6.5	103	63	47 (50)	22 (25)	M5	-	8
35		87 ±2	37 ±2	50 ±2	11.5 ±1	110	110	130	16 (19) (20)	8.5	132	85	48±1 (58) (58)	30 (40) (40)	M6 (M6) (M6)	-	9
41	**P1**	87 ±2	37 ±2	50±2	11.5 ±1	110	110	130	20 (19) (25)	8.5	135	85	59±1 (59) (69)	40 (40) (50)	M6 (M6) (M8)	/2-2 /3-8	9
	P2	85	—	—	10	105	110	130		9.5	130	80	58 (58) (68)				10
45	**P**	107.5±2	47.5±2	60±2	13.5 ±1	135	130	155	25 (24) (30)	11	154	100	69±1 (69) (79)	50 (50) (60)	M8 (M8) (M10)	/2-3 /3-9.5	11

	AMP/F. - ACP/F.									
	25		35			41			45	
	F1	F2	F1	F2	F3	F1	F2	F3	F1	F2
F	105	120	140	160	200	140	160	200	160	200
F_Q	—	—	110	120	150	110	120	150	120	160
G(g6)	70	80	95	110	130	95	110	130	110	130
R	85	100	115	130	165	115	130	165	130	165
V	7	7	9	9	13	9	9	13	9	13
U	3	3	3.5	3.5	3.5	3.5	3.5	3.5	3.5	3.5

	IEC	25		35		41		45		25	35	41	45
		Y	cMF	Y	cMF	Y	cMF	Y	cMF	cCP			
AMP/F../2	**B5**	120	116	—	—	140	151.5	160	171.5	93.5	—	—	—
		140	116	140	126.5	160	151.5	200 (IEC 80)	171.5				
				160	126.5	200	160	200 (IEC 90)	182.0				
				200	136.0	—	—	250	184.0				
	B14	80•	116	90•	126.5	90•	151.5	105•	171.5				
		90	116	105	126.5	105•	151.5	120	171.5				
				120	136.0	120	160	140	182.0				
						140	160	160	184.0				
AMP/F../3	**B5**	120	116	120	144.0	140	168	160	188.0				
		140	116	140	144.0	160	168	200	188.0				
				—	—								
				—	—								
	B14	80•	116	80•	144.0	90	168	105	188.0				
		90	116	90	144.0	105	168	120	188.0				
				—	—								

N.B.
La configurazione standard della flangia attacco motore prevede 4 fori a 45° (esempio x: vedi par. 1.3).
Per le flange contrassegnate con il simbolo (•) i fori per il fissaggio al motore sono disposti in croce (esempio +). Pertanto è opportuno valutare l'ingombro della morsettiera del motore che verrà installato in quanto essa verrà a trovarsi orientata a 45° rispetto agli assi. Per la scelta della posizione della morsettiera rispetto agli assi fare riferimento allo schema seguente (in cui la posizione 5 è quella standard):

NOTE:
The standard configuration for the holes is 45° to the axles (like an x: see par. 1.3).
For the B14 flanges marked with (•) the holes to fit the motor are on the axles (like a +). Therefore we suggest to check the dimensions of the terminal board of the motor as it will be at 45° to the axles. Please choose the terminal board position refering to the following sketch (in which n° 5 is the standard position):

ВНИМАНИЕ.
Стандартное расположение - 4 отверстия под углом в 45°(пример см. в разделе 1.3).

Для фланцев B14, отмеченных (•) посадочные отверстия двигателя находятся под углом. Поэтому необходимо проверить расположение клемной коробки (в этом случае 5 - стандартное положение):

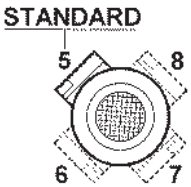

Le dimensioni cMF si riferiscono alle combinazioni albero/flangia B5 e B14, standard.
Per le dimensioni relative a combinazioni albero/flangia arichiesta, contattare il ns. servizio tecnico.

The cMF dimensions refer to the standard B5 and B14 shaft/flange combinations.
As far as the dimensions of shaft/flange combinations on request are concerned, please contact our technical department.

Для исполнений cMF размеры приведены стандартных комбинаций вал/фланец типа B14 и B5.
Для получения информации о нестандартных исполнениях обращайтесь в наш технический отдел.

Dimensioni riduttori
Dimensions gearboxes
Размеры редукторов

AM/2-3 - AR/2-3 - AC/2-3

AMP (50 - 120)

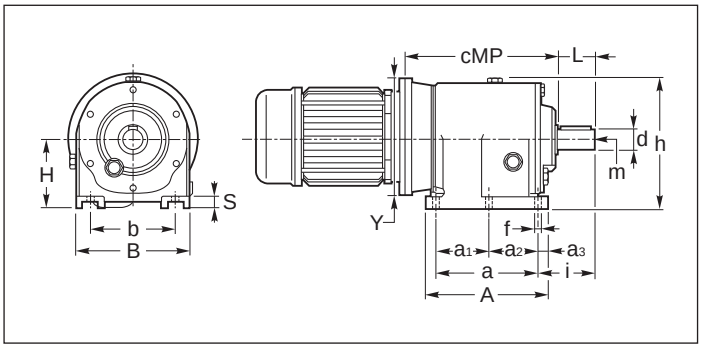

ACP (50 - 80)

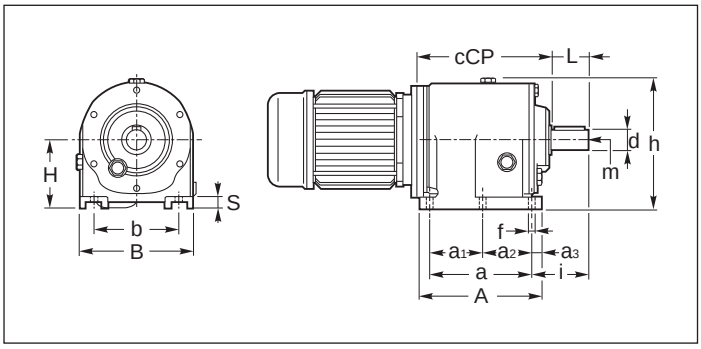

ARP (50 - 120)

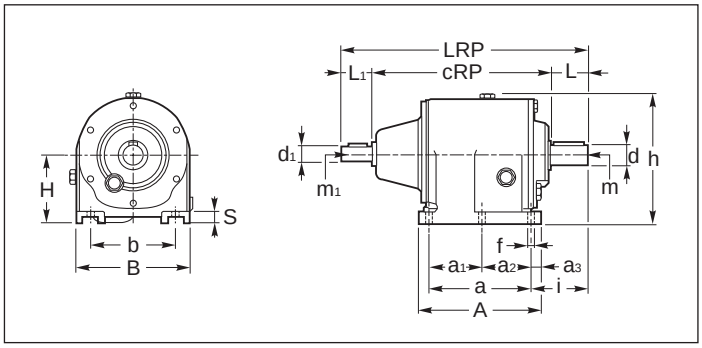

DownLoad 2D/3D

1.8 Dimensioni

1.8 Dimensions

1.8 Размеры

AM AC AR	a	a_1	a_2	a_3	A	b	B	cRP	d h6	d_1 j6	f	h	H	i	L	L_1	LRP	m	m_1	S
50	130	—	—	12.5	155	110 +1	145	227	25 (24) (30)	16	9.5	170	90	75 (75) (85)	50 (50) (60)	40	317 (317) (327)	M8 (M8) (M10)	M6	15
60	165	—	—	15	195	135	185	269	30 (28) (35)	19	14	210	115	90 (90) (100)	60 (60) (70)	40	369 (369) (379)	M10 (M10) (M10)	M6	20
80	205	—	—	20	245	170	230	309.5	40 (38)	24	20	265	140	115 (115)	80 (80)	50	440 (440)	M10 (M10)	M8	25
100	260	—	—	21	306	215	290	395	50 (48)	28	20	322	180	140 (140)	100 (100)	60	555 (555)	M12 (M12)	M8	35
120	310	—	—	27.5	365	250	350	460	60	38	23	415	225	160	120	80	660	M12	M10	45

	IEC	50		60		80		100		120			50	60	80
		Y	cMP	Y	cMP	Y	cMP	Y	cMP	Y	cMP		cCP		
AMP../2 ACP../2	**B5**	140	198	160	235	200	291	250	347.4	300	442.5		159	191	234
		160	198	200	250	250	303	300	347.4	350	456.5				
		200	218	250	260	300	322	350	411.4	400	456.5				
		250	228	300	284	350	352	400	416.4	450	465.5				
	B14	120	218	120	250										
		140	218	140	250										
		160	228	160	260										
				200	284										
AMP../3 ACP../3	**B5**	140	198	160	235	200	291	200	340.4	200	392				
		160	198	200	250	250	301	250	350.4	250	410				
		200	218	250	260			300	370.4	300	421				
	B14	120	218	120	250										
		140	218	140	250										
				160	260										

N.B.
La configurazione standard della flangia attacco motore prevede 4 fori a 45° (esempio x: vedi par. 1.3).
Per le flange contrassegnate con il simbolo (•) i fori per il fissaggio al motore sono disposti in croce (esempio +). Pertanto è opportuno valutare l'ingombro della morsettiera del motore che verrà installato in quanto essa verrà a trovarsi orientata a 45° rispetto agli assi. Per la scelta della posizione della morsettiera rispetto agli assi fare riferimento allo schema seguente (in cui la posizione 5 è quella standard):

NOTE:
The standard configuration for the holes is 45° to the axles (like an x: see par. 1.3).
For the B14 flanges marked with (•) the holes to fit the motor are on the axles (like a +). Therefore we suggest to check the dimensions of the terminal board of the motor as it will be at 45° to the axles. Please choose the terminal board position refering to the following sketch (in which n° 5 is the standard position):

ВНИМАНИЕ.
Стандартное расположение - 4 отверстия под углом в 45°(пример см. в разделе 1.3).

Для фланцев B14, отмеченных (•) посадочные отверстия двигателя находятся под углом. Поэтому необходимо проверить расположение клемной коробки (в этом случае 5 - стандартное положение):

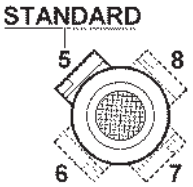

Le dimensioni cMP si riferiscono alle combinazioni albero/flangia B5 e B14, standard.
Per le dimensioni relative a combinazioni albero/flangia arichiesta, contattare il ns. servizio tecnico.

The cMP dimensions refer to the standard B5 and B14 shaft/flange combinations.
As far as the dimensions of shaft/flange combinations on request are concerned, please contact our technical department.

Для исполнений cMP размеры приведены стандартных комбинаций вал/фланец типа B14 и B5.
Для получения информации о нестандартных исполнениях обращайтесь в наш технический отдел.

Dimensioni riduttori
Dimensions gearboxes
Размеры редукторов

AM/2-3 - AR/2-3 - AC/2-3

AMF (50 - 120)

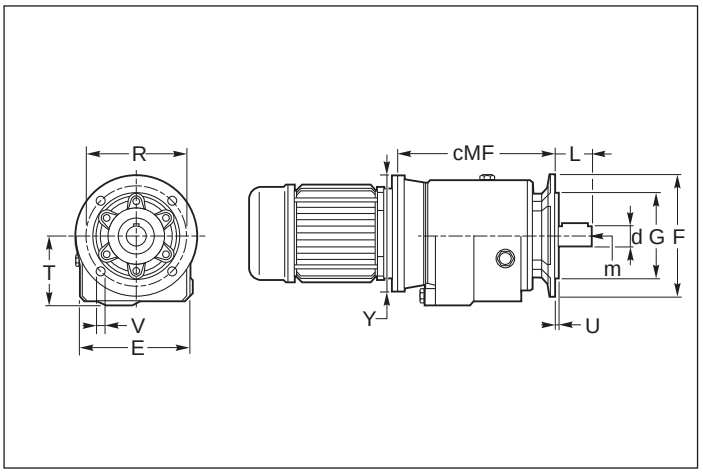

ACF (50 - 80)

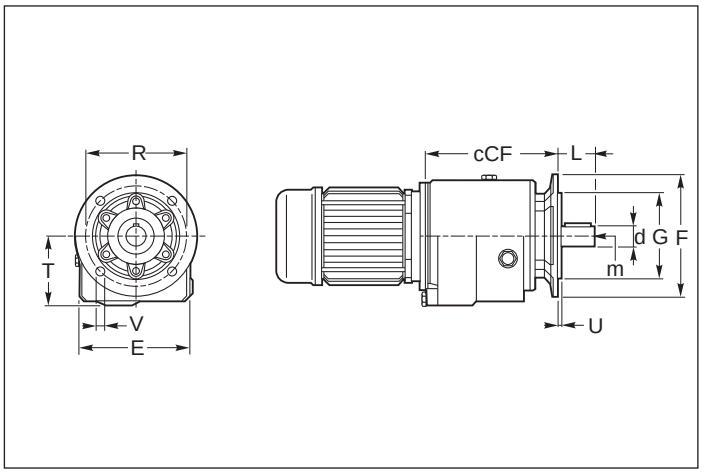

ARF (50 - 120)

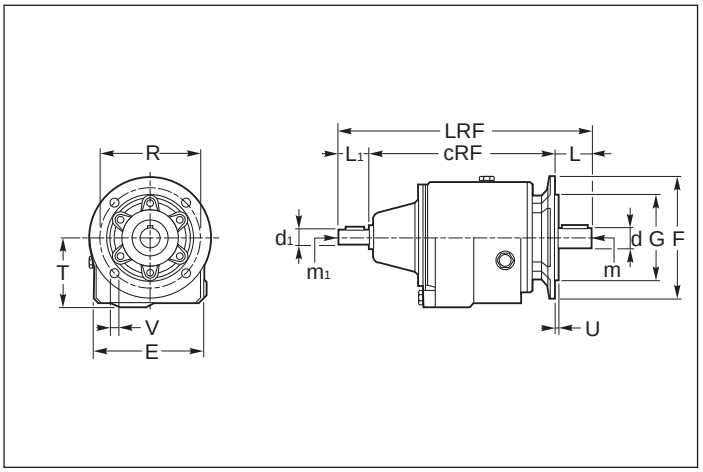

DownLoad 2D/3D

1.8 Dimensioni *1.8 Dimensions* 1.8 Размеры

AM AC AR	cRF	d h6	d_1 j6	E	L	L_1	LRF	m	m_1	T
50	235	25 (24) (30)	16	145	50 (50) (60)	40	325 (325) (335)	M8 (M8) (M10)	M6	89.5
60	280	30 (28) (35)	19	185	60 (60) (70)	40	380 (380) (390)	M10 (M10) (M10)	M6	114
80	317	40 (38)	24	230	80 (80)	50	447 (447)	M10 (M10)	M8	139
100	395	50 (48)	28	290	100 (100)	60	555 (555)	M12 (M12)	M8	178
120	491	60	38	350	120	80	691	M12	M10	225

B

	AMF.. - ACF..												
	50				60			80		100		120	
	F1	F2	F3	F4	F1	F2	F3	F1	F2	F1	F2	F1	F2
F	120	160	200	250	160	200	250	250	300	300	350	350	450
F_Q	—	—	—	—	—	—	—	—	—	—	—	—	—
G(g6)	80	110	130	180	110	130	180	180	230	230	250	250	350
R	100	130	165	215	130	165	215	215	265	265	300	300	400
V	9	10	13	15	10	13	15	15	15	15	19	19	19*
U	3	3.5	3.5	4	3	3.5	3.5	4	4	4	5	5	5

* 8 fori / holes

	IEC	50		60		80		100		120			50	60	80
		Y	cMF	Y	cMF	Y	cMF	Y	cMF	Y	cMF		cCF		
AMF../2 ACF../2	**B5**	140	206	160	246	200	298	250	347.4	300	473.5		167	202	241
		160	206	200	261	250	308	300	347.4	350	482.5				
		200	226	250	271	300	329	350	411.4	400	487.5				
		250	236	300	295	350	359	400	416.4	450	496.5				
	B14	120	226	120	261										
		140	226	140	261										
		160	236	160	271										
				200	295										
AMF../3 ACF../3	**B5**	140	206	160	246	200	298	200	340.4	200	423				
		160	206	200	261	250	308	250	350.4	250	445				
		200	226	250	271			300	370.4	300	452				
	B14	120	226	120	261										
		140	226	140	261										
				160	271										

N.B.
La configurazione standard della flangia attacco motore prevede 4 fori a 45° (esempio x: vedi par. 1.3).
Per le flange contrassegnate con il simbolo (•) i fori per il fissaggio al motore sono disposti in croce (esempio +). Pertanto è opportuno valutare l'ingombro della morsettiera del motore che verrà installato in quanto essa verrà a trovarsi orientata a 45° rispetto agli assi. Per la scelta della posizione della morsettiera rispetto agli assi fare riferimento allo schema seguente (in cui la posizione 5 è quella standard):

NOTE:
The standard configuration for the holes is 45° to the axles (like an x: see par. 1.3).
For the B14 flanges marked with (•) the holes to fit the motor are on the axles (like a +). Therefore we suggest to check the dimensions of the terminal board of the motor as it will be at 45° to the axles. Please choose the terminal board position refering to the following sketch (in which n° 5 is the standard position):

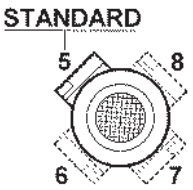

ВНИМАНИЕ.
Стандартное расположение - 4 отверстия под углом в 45°(пример см. в разделе 1.3).

Для фланцев B14, отмеченных (•) посадочные отверстия двигателя находятся под углом. Поэтому необходимо проверить расположение клемной коробки (в этом случае 5 - стандартное положение):

Le dimensioni cMF si riferiscono alle combinazioni albero/flangia B5 e B14, standard.
Per le dimensioni relative a combinazioni albero/flangia arichiesta, contattare il ns. servizio tecnico.

The cMF dimensions refer to the standard B5 and B14 shaft/flange combinations.
As far as the dimensions of shaft/flange combinations on request are concerned, please contact our technical department.

Для исполнений cMF размеры приведены стандартных комбинаций вал/фланец типа B14 и B5.
Для получения информации о нестандартных исполнениях обращайтесь в наш технический отдел.

Dimensioni riduttori
Dimensions gearboxes
Размеры редукторов

AM/2-3 - AR/2-3 - AC/2-3

AMP/F (50 - 60 - 80 - 120)

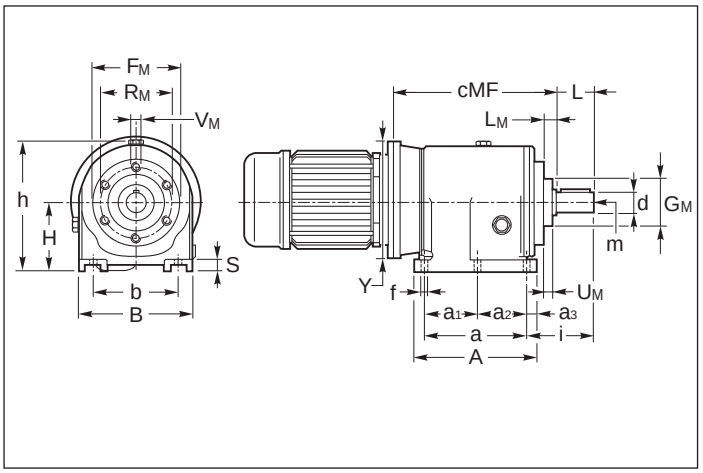

ACP/F (50 - 80)

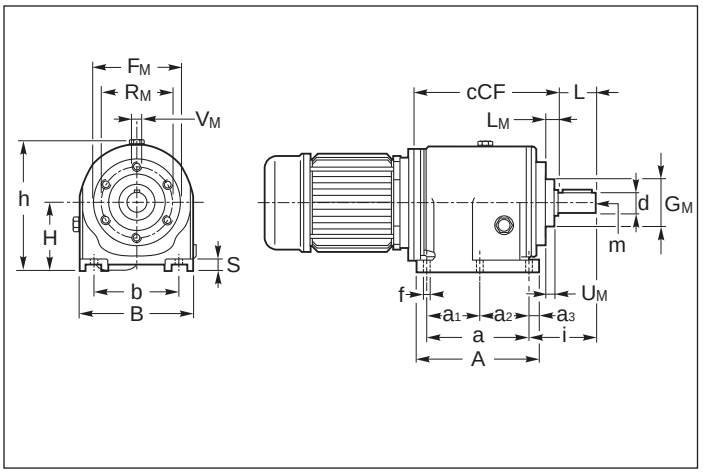

ARP/F (50 - 60 - 80 - 120)

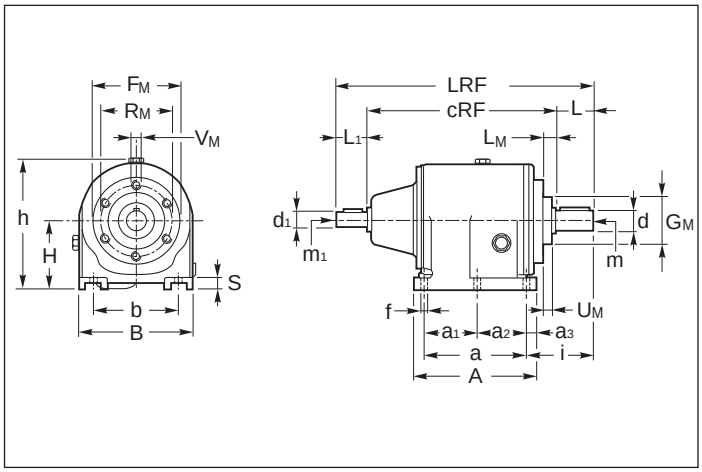

DownLoad 2D/3D

1.8 Dimensioni

1.8 Dimensions

1.8 Размеры

AM AC AR	a	a_1	a_2	a_3	A	b	B	cRF	d h6	d_1 j6	f	h	H	i	L	L_1	LRF	m	m_1	S
50	130	—	—	12.5	155	110	145	235	25 (24) (30)	16	9.5	170	90	83 (83) (93)	50 (50) (60)	40	325 (325) (335)	M8 (M8) (M10)	M6	15
60	165	—	—	15	195	135	185	280	30 (28) (35)	19	14	210	115	101 (101) (111)	60 (60) (70)	40	380 (380) (390)	M10 (M10) (M10)	M6	20
80	205	—	—	20	245	170	230	317	40 (38)	24	20	265	140	123 (123)	80 (80)	50	447 (447)	M10 (M10)	M8	25
120	310	—	—	27.5	365	250	350	491	60	38	23	415	225	191	120	80	691	M12	M10	45

B

	AMP/F. - ACP/F.			
	50	**60**	**80**	**120**
F_M	110	110	156.9	230
G_M(g6)	74	74	114	170
L_M	16	16	20	26.5
R_M	94	94	136	200
V_M	M8	M8	M10	M12
U_M	7	6	13	18

	IEC	50		60		80		120		50	60	80
		Y	cMF	Y	cMF	Y	cMF	Y	cMF	cCF		
AMP/F./2 ACP/F./2	**B5**	140	206	160	246	200	298	300	473.5	167	202	241
		160	206	200	261	250	308	350	482.5			
		200	226	250	271	300	329	400	487.5			
		250	236	300	295	350	359	450	496.5			
	B14	120	226	120	261							
		140	226	140	261							
		160	236	160	271							
				200	295							
AMP/F./3 ACP/F./3	**B5**	140	206	160	246	200	298	200	423			
		160	206	200	261	250	308	250	445			
		200	226	250	271			300	452			
	B14	120	226	120	261							
		140	226	140	261							
				160	271							

N.B.
La configurazione standard della flangia attacco motore prevede 4 fori a 45° (esempio x: vedi par. 1.3).
Per le flange contrassegnate con il simbolo (•) i fori per il fissaggio al motore sono disposti in croce (esempio +). Pertanto è opportuno valutare l'ingombro della morsettiera del motore che verrà installato in quanto essa verrà a trovarsi orientata a 45° rispetto agli assi. Per la scelta della posizione della morsettiera rispetto agli assi fare riferimento allo schema seguente (in cui la posizione 5 è quella standard):

NOTE:
The standard configuration for the holes is 45° to the axles (like an x: see par. 1.3).
For the B14 flanges marked with (•) the holes to fit the motor are on the axles (like a +). Therefore we suggest to check the dimensions of the terminal board of the motor as it will be at 45° to the axles. Please choose the terminal board position refering to the following sketch (in which n° 5 is the standard position):

ВНИМАНИЕ.
Стандартное расположение - 4 отверстия под углом в 45°(пример см. в разделе 1.3).

Для фланцев B14, отмеченных (•) посадочные отверстия двигателя находятся под углом. Поэтому необходимо проверить расположение клемной коробки (в этом случае 5 - стандартное положение):

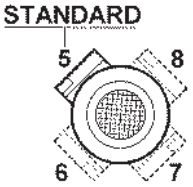

Le dimensioni cMF si riferiscono alle combinazioni albero/flangia B5 e B14, standard.
Per le dimensioni relative a combinazioni albero/flangia arichiesta, contattare il ns. servizio tecnico.

The cMF dimensions refer to the standard B5 and B14 shaft/flange combinations.
As far as the dimensions of shaft/flange combinations on request are concerned, please contact our technical department.

Для исполнений cMF размеры приведены стандартных комбинаций вал/фланец типа B14 и B5.
Для получения информации о нестандартных исполнениях обращайтесь в наш технический отдел.

Dimensioni riduttori
Dimensions gearboxes
Размеры редукторов

AM/2-3 - AR/2-3 - AC/2-3

AMP/F1.. (50 - 120)

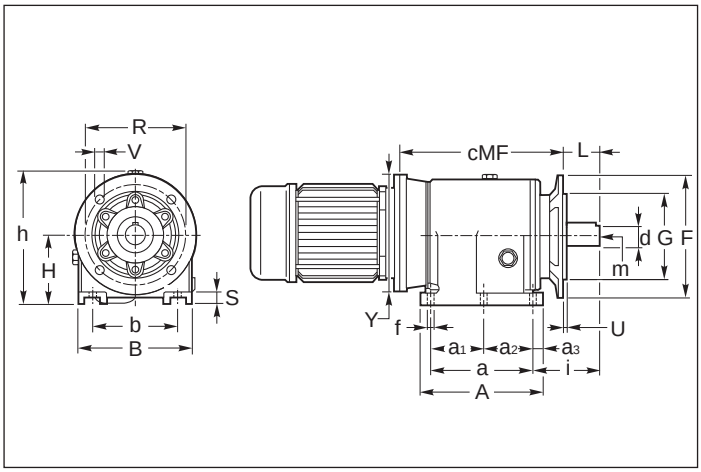

ACP/F1.. (50 - 80)

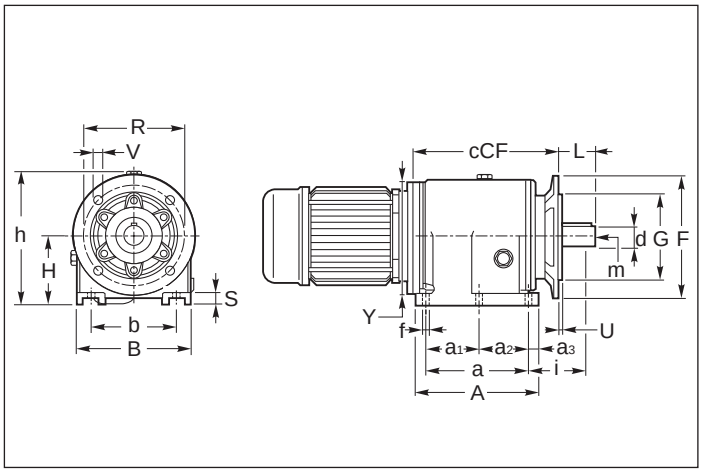

ARP/F1.. (50 - 120)

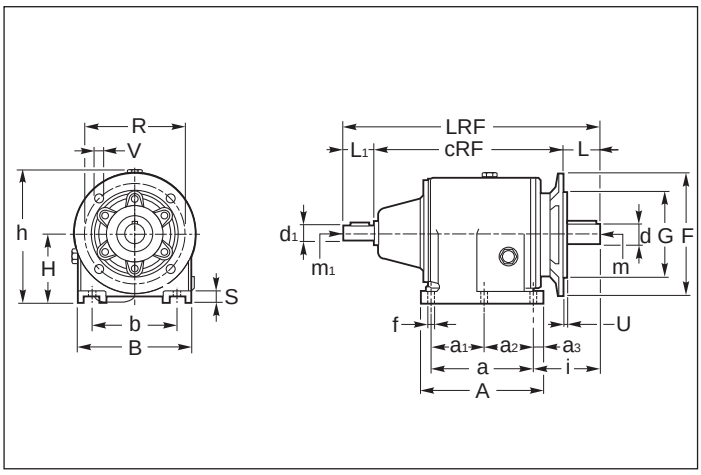

DownLoad 2D/3D

1.8 Dimensioni

1.8 Dimensions

1.8 Размеры

AM AC AR	a	a_1	a_2	a_3	A	b	B	cRF	d h6	d_1 j6	f	h	H	i	L	L_1	LRF	m	m_1	S
50	130	—	—	12.5	155	110	145	235	25 (24) (30)	16	9.5	170	90	83 (83) (93)	50 (50) (60)	40	325 (325) (335)	M8 (M8) (M10)	M6	15
60	165	—	—	15	195	135	185	280	30 (28) (35)	19	14	210	115	101 (101) (111)	60 (60) (70)	40	380 (380) (390)	M10 (M10) (M10)	M6	20
80	205	—	—	20	245	170	230	317	40 (38)	24	20	265	140	123 (123)	80 (80)	50	447 (447)	M10 (M10)	M8	25
100	260	—	—	21	306	215	290	395	50 (48)	28	20	322	180	140 (140)	100 (100)	60	555 (555)	M12 (M12)	M8	35
120	310	—	—	27.5	365	250	350	491	60	38	23	415	225	191	120	80	691	M12	M10	45

B

	AMP/F1.. - ACP/F1..												
	50				60			80		100		120	
	F1	F2	F3	F4	F1	F2	F3	F1	F2	F1	F2	F1	F2
F	120	160	200	250	160	200	250	250	300	300	350	350	450
F_Q	—	—	—	—	—	—	—	—	—	—	—	—	—
G(g6)	80	110	130	180	110	130	180	180	230	230	250	250	350
R	100	130	165	215	130	165	215	215	265	265	300	300	400
V	9	10	13	15	10	13	15	15	15	15	19	19	19*
U	3	3.5	3.5	4	3	3.5	3.5	4	4	4	5	5	5

* 8 fori / holes

	IEC	50		60		80		100		120		50	60	80
		Y	cMF	Y	cMF	Y	cMF	Y	cMF	Y	cMF	cCF		
AMP/F1../2 ACP/F1../2	B5	140	206	160	246	200	298	250	347.5	300	473.5	167	202	241
		160	206	200	261	250	308	300	347.4	350	482.5			
		200	226	250	271	300	329	350	411.4	400	487.5			
		250	236	300	295	350	359	400	416.4	450	496.5			
	B14	120	226	120	261									
		140	226	140	261									
		160	236	160	271									
				200	295									
AMP/F1../3 ACP/F1../3	B5	140	206	160	246	200	298	200	340.4	200	423			
		160	206	200	261	250	308	250	350.4	250	445			
		200	226	250	271			300	370.4	300	452			
	B14	120	226	120	261									
		140	226	140	261									
				160	271									

N.B.
La configurazione standard della flangia attacco motore prevede 4 fori a 45° (esempio x: vedi par. 1.3).
Per le flange contrassegnate con il simbolo (•) i fori per il fissaggio al motore sono disposti in croce (esempio +). Pertanto è opportuno valutare l'ingombro della morsettiera del motore che verrà installato in quanto essa verrà a trovarsi orientata a 45° rispetto agli assi. Per la scelta della posizione della morsettiera rispetto agli assi fare riferimento allo schema seguente (in cui la posizione 5 è quella standard):

NOTE:
The standard configuration for the holes is 45° to the axles (like an x: see par. 1.3).
For the B14 flanges marked with (•) the holes to fit the motor are on the axles (like a +). Therefore we suggest to check the dimensions of the terminal board of the motor as it will be at 45° to the axles. Please choose the terminal board position refering to the following sketch (in which n° 5 is the standard position):

ВНИМАНИЕ.
Стандартное расположение - 4 отверстия под углом в 45°(пример см. в разделе 1.3).

Для фланцев B14, отмеченных (•) посадочные отверстия двигателя находятся под углом. Поэтому необходимо проверить расположение клемной коробки (в этом случае 5 - стандартное положение):

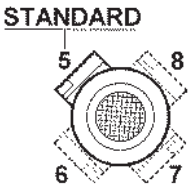

Le dimensioni cMF si riferiscono alle combinazioni albero/flangia B5 e B14, standard.
Per le dimensioni relative a combinazioni albero/flangia arichiesta, contattare il ns. servizio tecnico.

The cMF dimensions refer to the standard B5 and B14 shaft/flange combinations.
As far as the dimensions of shaft/flange combinations on request are concerned, please contact our technical department.

Для исполнений cMF размеры приведены стандартных комбинаций вал/фланец типа B14 и B5.
Для получения информации о нестандартных исполнениях обращайтесь в наш технический отдел.

1.9 Linguette

1.9 Keys

1.9 Шпонки

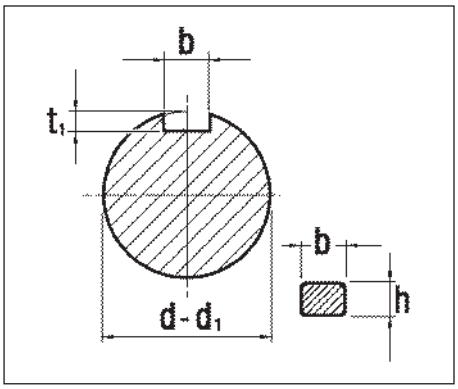

Albero entrata
Input shaft
Входной вал

d_1	b x h	t_1	
16	5 x 5	3.0	+ 0.1 0
19	6 x 6	3.5	
24	8 x 7	4.0	+ 0.2 0
28	8 x 7	4.0	

Albero uscita
Output shaft
Выходной вал

d	b x h	t_1	
11	4 x 4	2.5	+ 0.1 0
14	5 x 5	3.0	
16	5 x 5	3.0	
19	6 x 6	3.5	
20	6 x 6	3.5	
24	8 x 7	4.0	+ 0.2 0
25	8 x 7	4.0	
28	8 x 7	4.0	
30	8 x 7	4.0	
35	10 x 8	5.0	
38	10 x 8	5.0	
40	12 x 8	5.0	
48	14 x 9	5.5	
50	14 x 9	5.5	
60	18 x 11	7.0	